Batteries

Chapter7

What is a Battery?

- Batteries are a collection of one or more cells whose chemical reactions create a flow of electrons in a circuit. All batteries are made up of three basic components: an anode (the '-' side), a cathode (the '+' side), and some kind of electrolyte (a substance that chemically reacts with the anode and cathode).

Primary Batteries

- Batteries that must be thrown away after use are known as **primary batteries**

Secondary Batteries

- Batteries that can be recharged are called **secondary batteries**.

Definition of Cell:

- A primary cell cannot be recharged because the internal chemical reaction cannot be restored. Example: ZINC CARBON (1.5V),ALKALINE (1.5V)

- A secondary cell, or storage cell, can be recharged because its chemical reaction is reversible. Example: LEAD ACID (2.0V),NICKEL - CADMIUM (1.2V),NICKEL - METAL HYDRIDE (1.2V),LITHIUM – ION (3.3V)

Cell

- Motion of electrons in ionic bonding can be used to generate an electric current
- A device constructed to do just this is called a voltaic cell, or cell for short

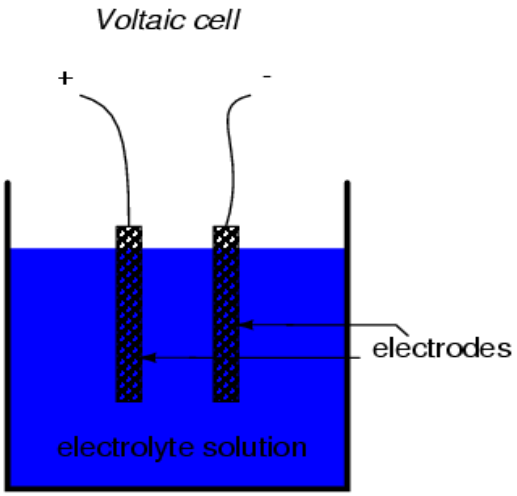

The two electrodes are made of different materials, both of which chemically react with the electrolyte in some form of ionic bonding.

Lead Acid Battery:

- Electrolyte for the most part distilled (pure) water, with some sulfuric acid mixed with the water.
- Electrodes must be of dissimilar metals.

Construction:

1.Separator: It is most important part of lead acid battery. Which separate the positive and negative plates from each other and prevents the short circuit? The separators must be porous so that the electrolyte may circulate between the plates . The separators must have higher insulating resistance and mechanical strength. The material used for separators are wood, rubber, glass wood mate, pvc.

2. Electrolyte: in lead acid battery dilute sulphuric acid (H2SO4)is used as an electrolyte. For this purpose one part concentrated sulphuric acid is mixed with three parts of distilled water.

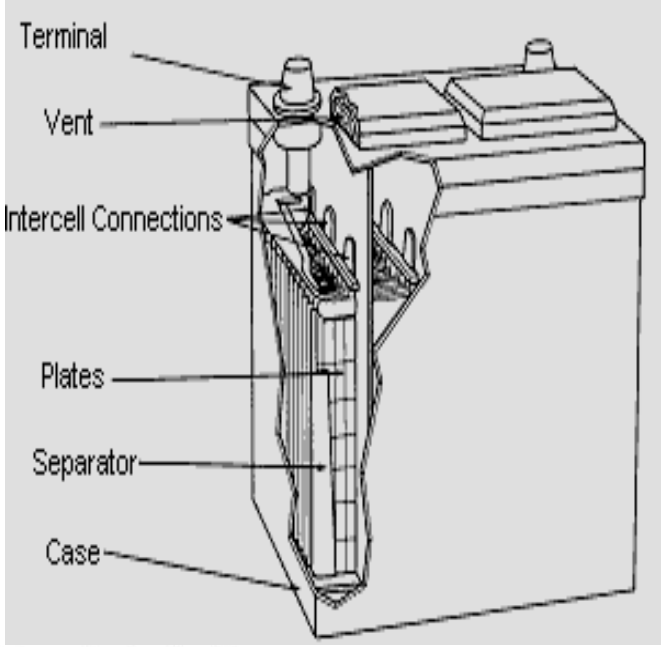

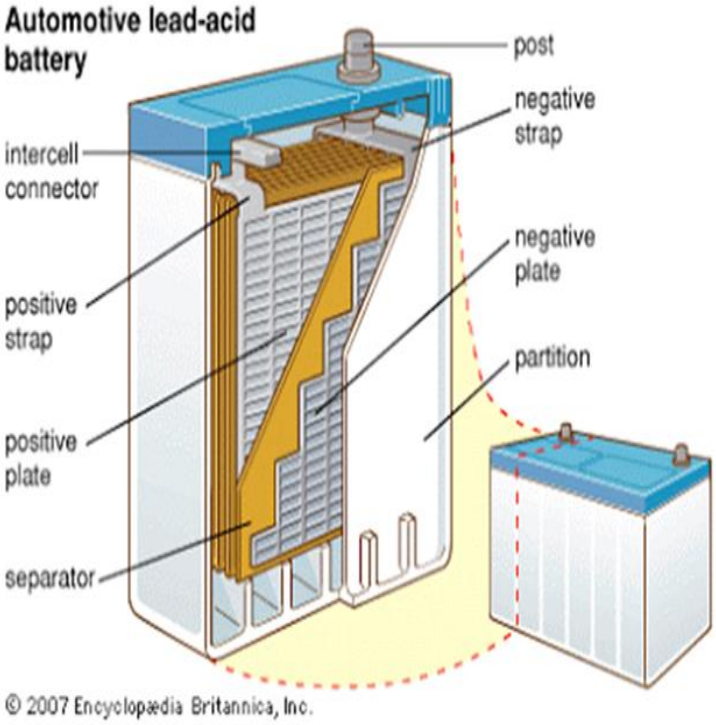

3. Container: Container is a box of vulcanized rubber, molded rubber, molded plastic, glass or ceramic , on the base of this box there are supports block on which the positive and negative plates are established. Thus between this supports there are grooves which works like a mud box. The active material separated from the plates get collected in this mud box and it cannot make the contact with the plates thus the internal faults due to the mud are avoided.

4. Cover of cell: In lead acid battery it is also made of the same material which is used is used for making container. It is used to cover the complete cell after the installation of the plates in it . it protects the cell from the dust as well as other external impurities.

5. Vent plug: The vent plug are provide in the cover plate of the cell which are used to fill up the electrolyte in the cell or the inspection of internal condition of the cell the vent plugs are also use for to exhaust the gases generated in the cell to the atmosphere.

6. Connecting bar: It works like a link and used to connect the two cells in series. Terminal of one cell and negative terminal of another cell.

7 terminal posts: There are the terminals of the battery which are connected to charging circuit as well as the load. For identification the diameter of the positive terminal is design more as compared to the negative terminal.

working of lead acid battery:

•Dilute sulfuric acid used for lead acid battery has ratio of acid: water = 1:3. This lead acid storage battery is formed by dipping lead peroxide plate and sponge lead plate in dilute sulfuric acid. A load is connected externally between these plates.

•**During Discharging:** In diluted sulfuric acid the molecules of the acid split into positive hydrogen ions and negative sulfate ions . The hydrogen ions when reach at PbO_2 plate, they receive electrons from it and become hydrogen atom which again attack PbO_2 and form PbO and H_2O (water). This PbO reacts with H_2 SO_4 and forms $PbSO_4$ and H_2O.

• SO_4^{--} ions are moving towards Pb plate where they give their extra electrons and react with Pb and forms $PbsO_4$.

working of lead acid battery

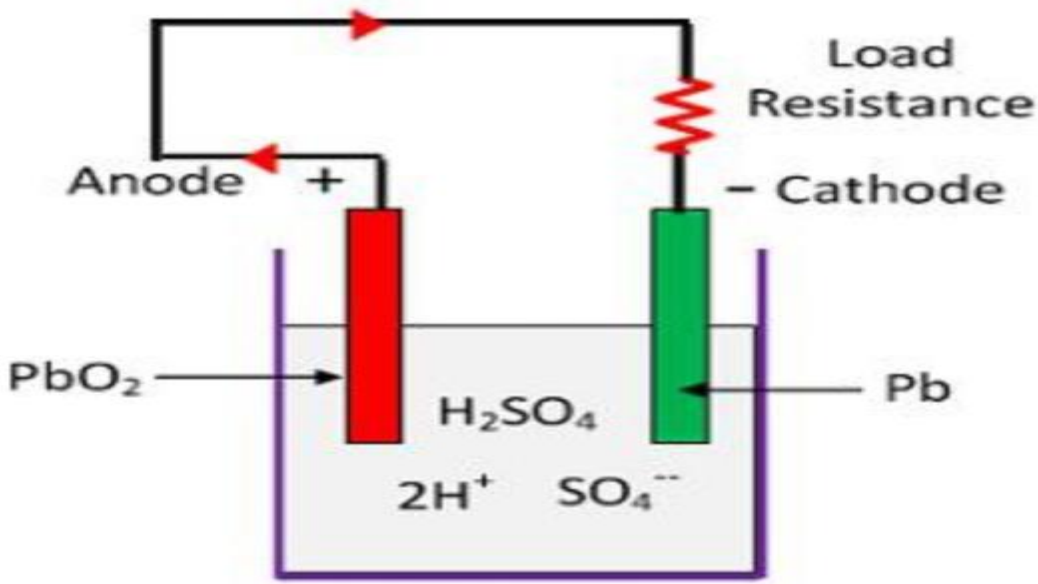

<u>Positive plate reaction</u>

$PbO_2(s) + 2H^+ \rightarrow PbO + H_2O$

$PbO + H_2SO_4 \rightarrow PbSo4 + H_20$

The total reaction can be written as

$Pbo2 + H_2SO_4 + 2H^+ \rightarrow PbSo4 + 2H_20$

<u>Negative plate reaction</u>

<u>Pb+So4</u> $\rightarrow PbSO_4$

As H+ ions take electron from PbO_2 plate and SO_4 ions give electrons to Pb plate, there would be an inequality of electrons between these two plate. Hence there would be flow of current through the external load between these plates for balancing this inequality of electron. This process is called discharging of lead acid battery.

During Charging: During discharging , the density of sulfuric acid falls but there still sulfuric acid exist in the solution. In this case Hydrogen ions being positive charged move to the cathode connected with –ve terminal of DC source. Here each hydrogen ions take one electron from that and become hydrogen atom. These hydrogen atom then attack PbSO4 and form lead and sulfuric acid.

$$PbSO_4+2H \rightarrow H_2SO_4+Pb$$

Sulfate ions moves towards the anode connected with +ve terminal of DC source where they will give up their extra electrons and become SO4 and form lead peroxide and sulfuric acid.

$$PbSO_4+2H_2+So_4 \rightarrow PbO_2+2H_2SO_4$$

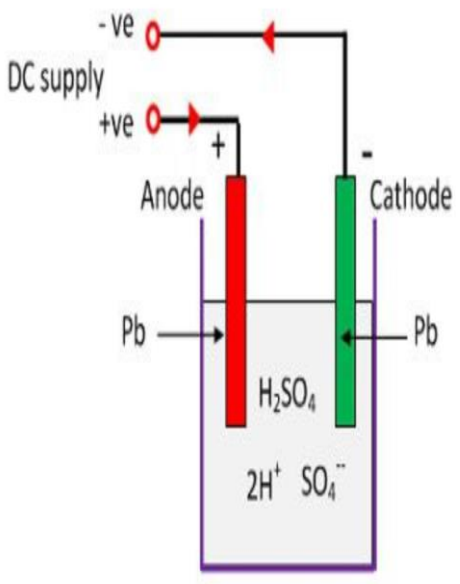

Applications of lead acid battery

- These are used in automobiles for lighting and starting the vehicles. In some cases, these batteries supply current to music system etc. fitted into automobiles.
- These are used to deliver power to the lighting system in steam fed and diesel railway trains.
- These are used at generating stations and sub station to operate the controlling equipment.
- These are used in telephone exchanges.
- These are used to operate loudspeakers etc.
- These are used to provide emergency lights erc.

Nickle cadmium battery

Nickel-cadmium batteries, generally referred to as NiCad batteries, are in wide use in the aviation industry. With proper maintenance, they can provide years of trouble-free service.

Positive plate- Nickel hydroxide(Ni(OH)4)

Negative plate- Cadmium(Cd)

Electrolyte- potassium hydroxide(KOH) with a small addition of lithium hydrate.

Discharging :

At cathode: $Cd+2OH \rightarrow Cd(OH)2$

At anode: $Ni(OH)4 +2K \rightarrow 2KOH+Ni(OH)2$

Charging:

At anode: $Ni(OH)2 +2OH \rightarrow Ni(OH)4$

At cathode: $Cd(OH)2+2K \rightarrow Cd+2KOH$

Silver oxide cell:

A silver-oxide battery is a primary cell with a very high energy-to-weight ratio. Available either in small sizes as button cells, where the amount of silver used is minimal and not a significant contributor to the product cost, or in large custom-designed batteries, where the superior performance of the silver-oxide chemistry outweighs cost considerations. These larger cells are mostly found in applications for the military In recent years they have become important as reserve batteries for manned and unmanned spacecraft. Spent batteries can be processed to recover their silver content.

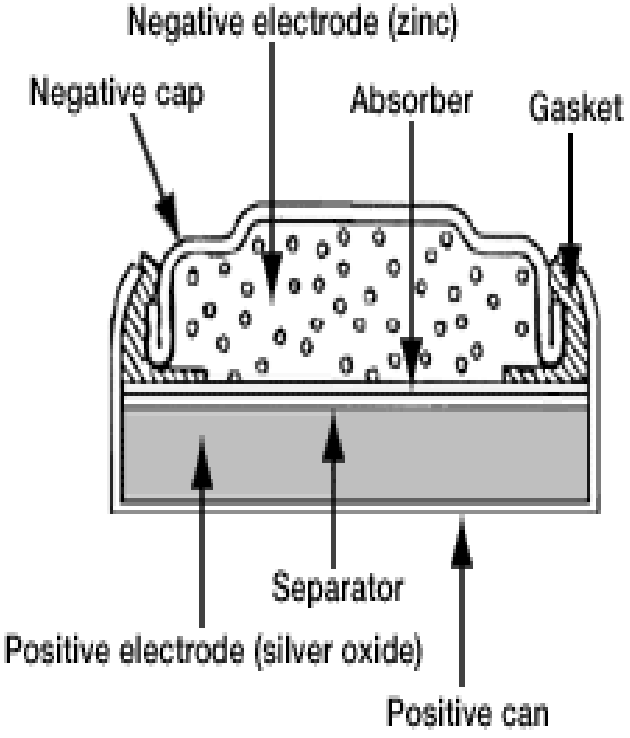

Principle and reaction

The button-type silver oxide battery uses silver oxide (Ag2O) as its positive active material and zinc (Zn) as its negative active material. Potassium hydroxide (KOH) (W-type) or sodium hydroxide (NaOH) (SW-type) is used as an electrolyte

Battery Reactions	
Positive reaction :	$Ag_2O+H_2O+2e^- \rightarrow 2Ag+2OH^-$
Negative reaction :	$Zn+2OH^- \rightarrow ZnO+H_2O+2e^-$
Total reaction :	$Ag_2O+Zn \rightarrow 2Ag+ZnO$

Methods of charging :

1. constant-current method,
2. constant-voltage method,
3. modified constant-voltage method,
4. float charging method, and trickle charging method.

1. Constant-current charging method :

In the constant-current method, a fixed current is applied for a certain time to the battery to recharge it. The charging current is set to a low value to avoid the voltage across the battery from exceeding the gassing voltage as the battery charge approaches 100%. Consequently, this results in long charge times (usually 12 hours or longer). Though it is used for charging some small lead-acid batteries, the constant current charging method is not widely used for lead-acid batteries, because of the gassing which is likely to occur when charging a battery too long. The risk of gassing is more important when charging a battery which is only partially discharged.

2. Constant-voltage charging method :

In the constant-voltage charging method, a fixed-voltage is applied to the battery to recharge it. The initial charging current (current at the beginning of the battery charge) is at its maximum and can even reach higher values (even exceeding the maximum charge current prescribed by the battery manufacturer) when the battery depth of discharge is high. For this reason, purely constant-voltage charging is seldom used to charge lead-acid batteries that are used in cyclic charge-discharge applications (e.g., battery in an electric vehicle). However, constant-voltage charging is often used to maintain the charge of lead-acid batteries used in standby applications (e.g., as in uninterruptable power supplies), in which case the charge process is referred to as float charging

3. Float charging method:

In the float charging method, a constant voltage, set to a value just sufficient to finish the battery charge or to maintain the full charge is applied to the battery. Typical float charging voltage values range from about 2.15 V to 2.3 V per battery cell. The float charging method is commonly used to maintain the charge of lead acid batteries used in stationary applications, such as in uninterruptable power supplies and SLI batteries (when the battery is charged from the motor alternator). Note that to achieve a full recharge with a low constant voltage requires the proper selection of the starting current, which is based on the manufacturer's specifications.

4. Trickle charging method:

In the trickle charging method, a low-value constant current is applied to the battery. This small current is sufficient to maintain the full charge of a battery or to restore the charge of a battery that is used intermittently for short periods of time. The trickle charging method, also called the compensating charge, is used to maintain the charge of batteries used for stationary applications and SLI batteries. During trickle charging, the battery is disconnected from the load.

Installation of Lead Acid Batteries:

1. Before removing old battery, mark the positive (+) and negative (–) cables for proper connection to the new battery.
2. Always disconnect the ground cable first [usually negative (–)] to avoid any sparking around battery. Then disconnect the positive (+) cable and carefully remove the old battery.
3. Clean and inspect. If necessary, repaint or replace the tray, hold-down and/or battery cables. Cable ends must be clean and corrosion free. Cable must not be frayed or bare.
4. Put corrosion protection washers on battery terminals. Install new battery in same position as old one and tighten hold-down. Be sure terminals will clear hood, fender, box lid, etc. to avoid vehicle damage and/or explosion.

Installation of Lead Acid Batteries

- 5. Connect positive (+) cable first. Connect ground cable last. If side terminal connection, use a special side terminal torque tool to tighten side terminal cables to avoid damage. Never overtighten or hammer cables onto terminals.
- 6. Coat terminals and cable connection with a corrosion protection spray.

Care and Maintenance of Lead Acid Batteries:

1. As soon as the voltage of the cell reaches from 1.8 volt, the specific gravity of the electrolyte goes down to discharge level
2. The discharged battery should be put on charge without delay otherwise the lead sulphate on the plates settle down which may damage the battery.
3. The battery should not be overcharged.
4. All connections should be tight.
5. The battery room should e free from dust.
6. These should be placed in a ventilated room to prevent the gases evolved from the battery.
7. Charging rate should not be high as this may cause the plates to buckle.
8. The level of the electrolyte should be proper.
9. Check the vent holes and see that these are open and blo9cked by dust and air.
10. While preparing the electrolyte for the battery, it is acid that is to be added to the water.
11. The battery terminals should never be short circuited.

Testing of a fully charged battery:

- Voltage: The voltage of a fully charged cell is abut 2.2 volts, but quickly comes to 2.0 V when put on load
- Gassing: During discharging free gasses is an indication that battery has been charged.
- Specific gravity: During charging process, the specific gravity of the electrolyte increases and provides an important indication to the state of charge of the cell. The specific gravity of a fully charged cell is 1.28 and can be measured with hygrometer.
- Color of plate: The color of positive plate turns chocolate brown and that of negative plate is grey

Grouping of Cell:

- Grouping of cell in Series: The current capacity of a battery with cells in series is the same as that for one cell because the same current flows through all series cells. Positive terminal of one cell is connected to the negative terminal of the next, is called a series connected battery.

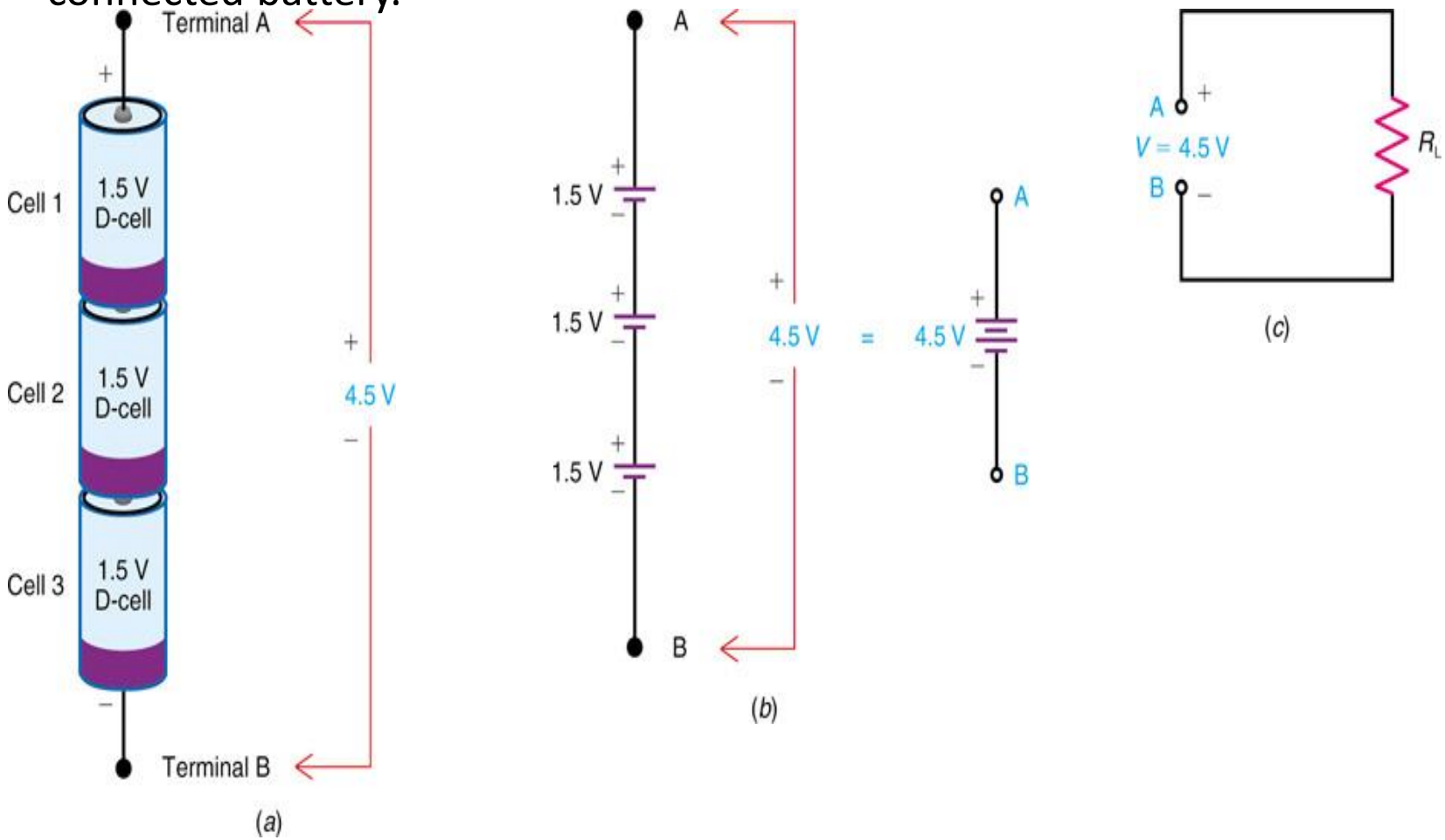

Groping of Cell in Parallel:

- **The <u>parallel</u> connection is equivalent to increasing the size of the electrodes and electrolyte, which increases the current capacity.**
- Connect the negative terminal from one cell to the negative of the next cell
- Connect the positive terminal to the positive terminal, is parallel connected.
- Voltage remains constant and the current is cumulative.

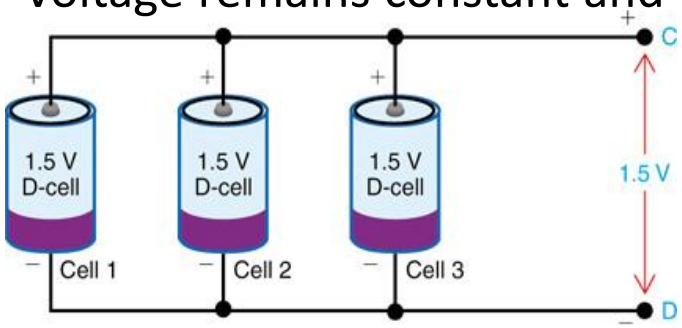

(a)

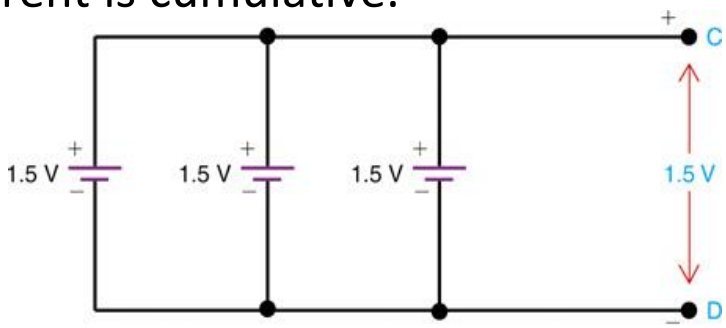

(b)

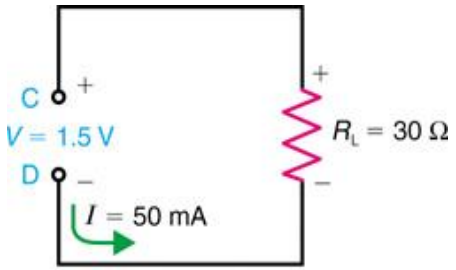

(c)

Maintenance-free batteries

- They are also called VRLA, or “Valve Regulated Lead Acid” batteries.
- Maintenance-free batteries should **never be topped up**, therefore there are no filler caps on top.
- The filler cap is replaced by an over-pressure valve that is normally closed.
- Any gas that forms ends up being recombined in the cell as water.
- Maintenance-free batteries have to be charged up with a **charger that is suitable for this type of battery.**

Types of maintenance-free batteries

AGM batteries (Absorbent Glass Mat) use separators consisting of a sponge-like glass fibre mat that is squeezed between the flat battery plates. The electrolyte is incorporated in the glass fibre mat. The first AGM batteries were developed during the 1980's in Japan and were used mainly in the UPS market. In the meantime development has continued and there are now AGM batteries for the cyclical battery market.

GEL batteries use traditional separators, except that a silicate is added to the acid whereby the acid becomes a gel after initial filling. Gel batteries have been in existence since the 1950's and have in the meantime created a good reputation for maintenance-free batteries.

Solar cell

•A **solar cell**, or **photovoltaic cell**, is an electrical device that converts the energy of light directly into electricity by the photovoltaic effect
•It is a form of photoelectric cell, defined as a device whose electrical characteristics, such as current, voltage, or resistance, vary when exposed to light.
• The common single junction silicon solar cell can produce a maximum open-circuit voltage of approximately 0.5 to 0.6 volts

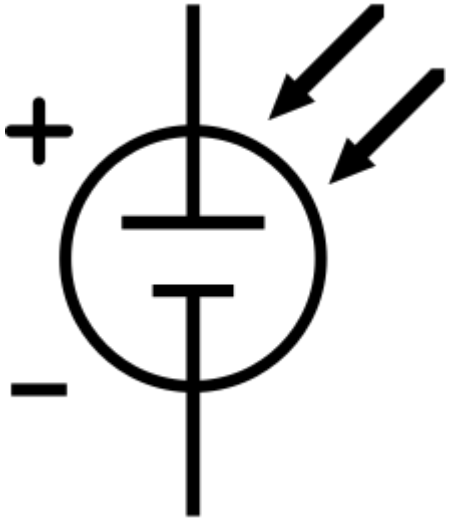

Symbol of a Photovoltaic cell

Solar Panels

- A solar panel is actually a collection of solar (or photovoltaic) cells, which can be used to generate electricity through photovoltaic effect. These cells are arranged in a grid-like pattern on the surface of solar panels.
- It may also be described as a set of photovoltaic modules, mounted on a structure supporting it. A photovoltaic (PV) module is a packaged and connected assembly of 6×10 solar cells.
- Most solar panels are made up using crystalline silicon solar cells.
- Installation of solar panels in homes helps in combating the harmful emissions of greenhouse gases and thus helps reduce global warming
- only major drawback of solar panels is that they are quite costly
- Solar panels are installed outdoors as they need sunlight to get charged

Solar Panels

Applications of solar panel

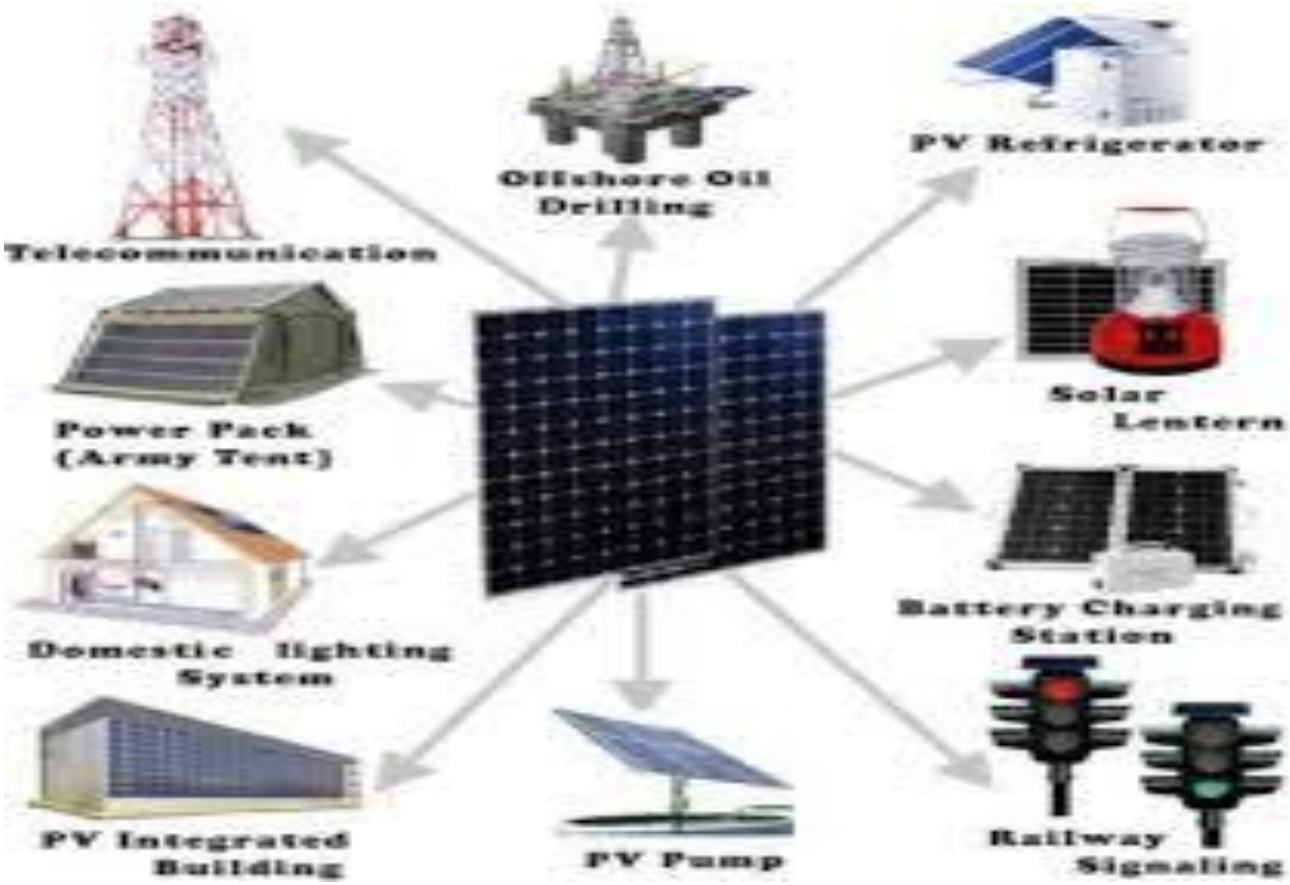

Applications of solar panel

- Solar Water Heating
- Solar Heating of Buildings
- Solar-pumping
- Solar Drying of Agricultural and Animal Products
- Solar Furnaces
- Solar Cooking
- Solar Electric Power Generation
- Solar Thermal Power Production
- Solar Green Houses

Introduction to electrical machines
Chapter 13

Transformers

Transformer

An A.C. device used to change high voltage low current A.C. into low voltage high current A.C. and vice-versa without changing the frequency

In brief,

1. Transfers electric power from one circuit to another
2. It does so without a change of frequency
3. It accomplishes this by electromagnetic induction
4. Where the two electric circuits are in mutual inductive influence of each other.

Principle of operation

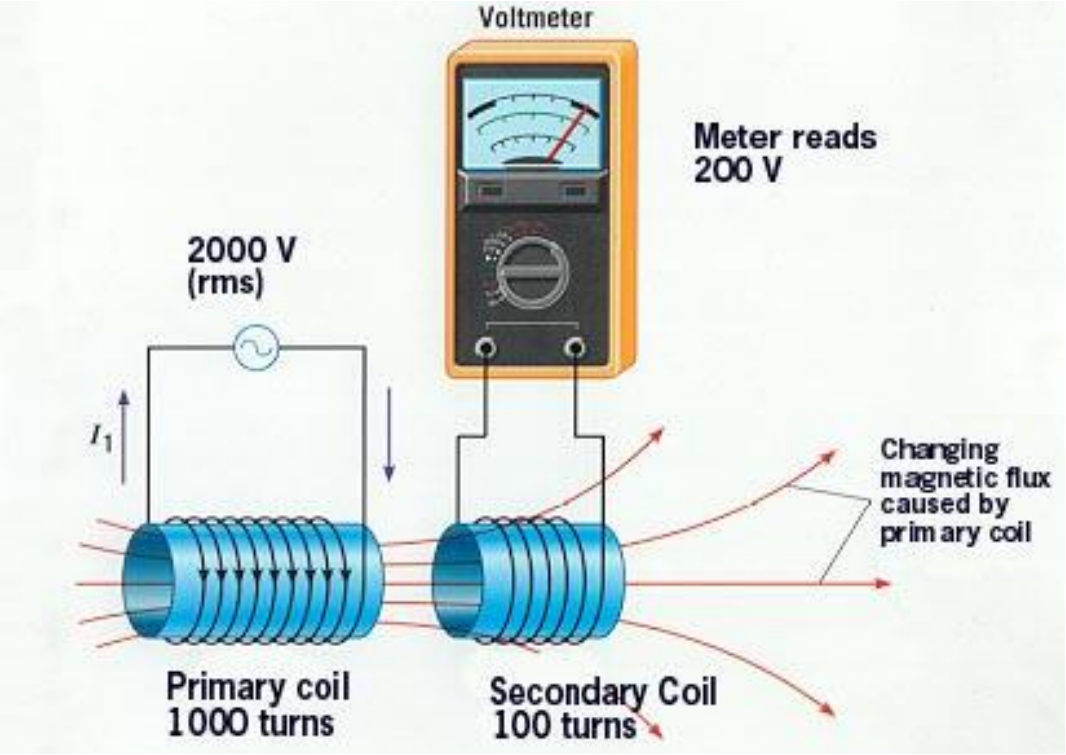

It is based on principle of MUTUAL INDUCTION.

According to which an e.m.f. is induced in a coil when current in the neighbouring coil changes.

Constructional detail : Shell type

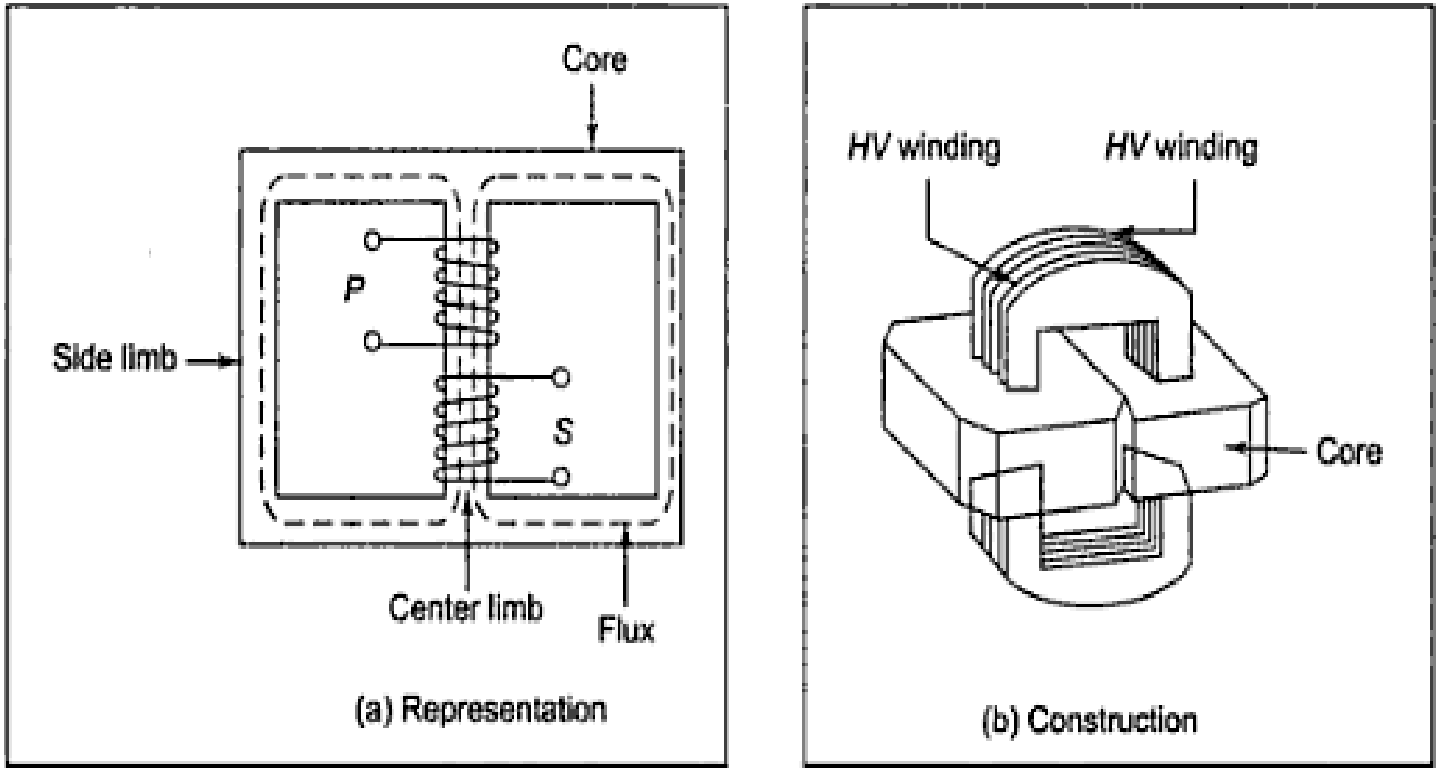

Windings are wrapped around the center leg of a laminated core.

Core type

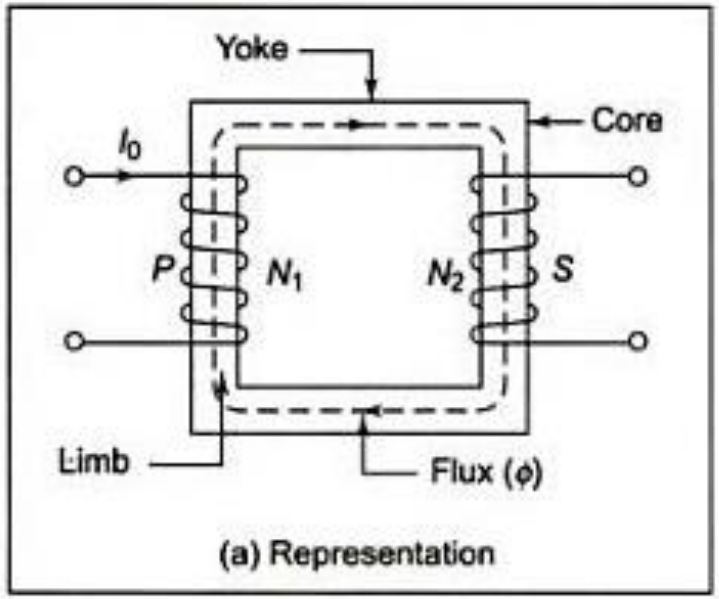

(a) Representation

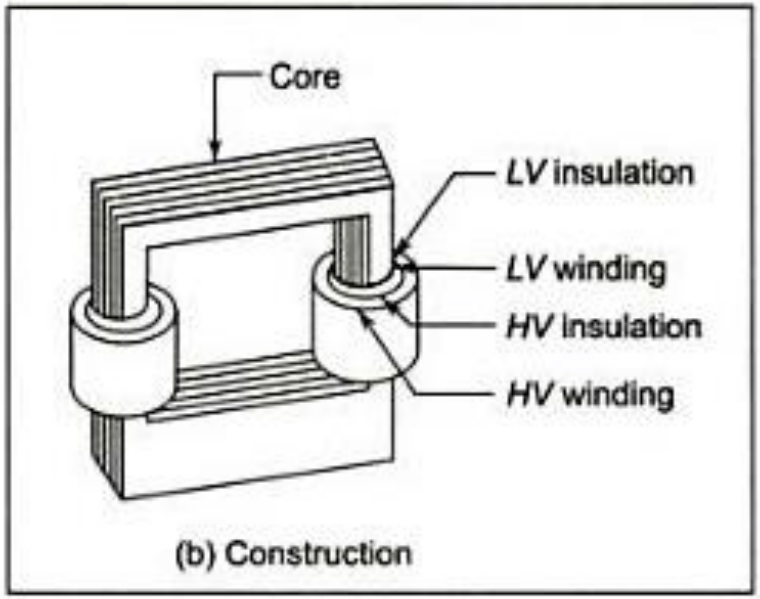

(b) Construction

- Windings are wrapped around two sides of a laminated square core.

Sectional view of transformers

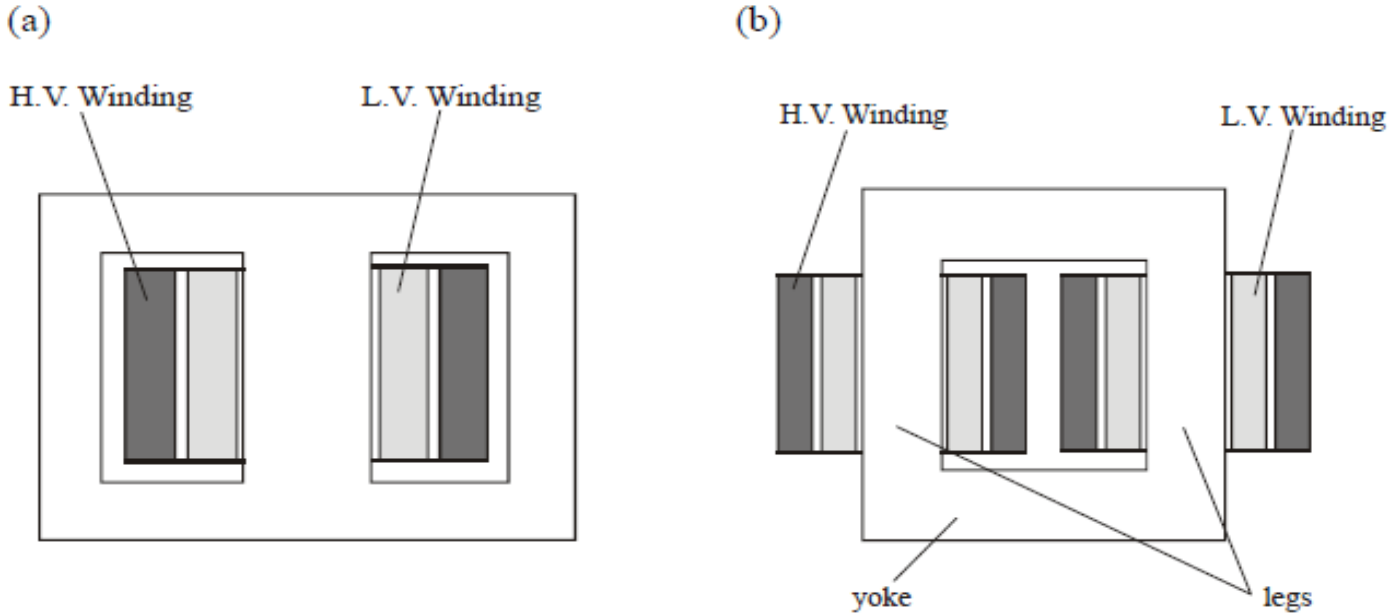

(a) Shell-type transformer, (b) core-type transformer

Note:

High voltage conductors are smaller cross section conductors than the low voltage coils

Construction of transformer from stampings

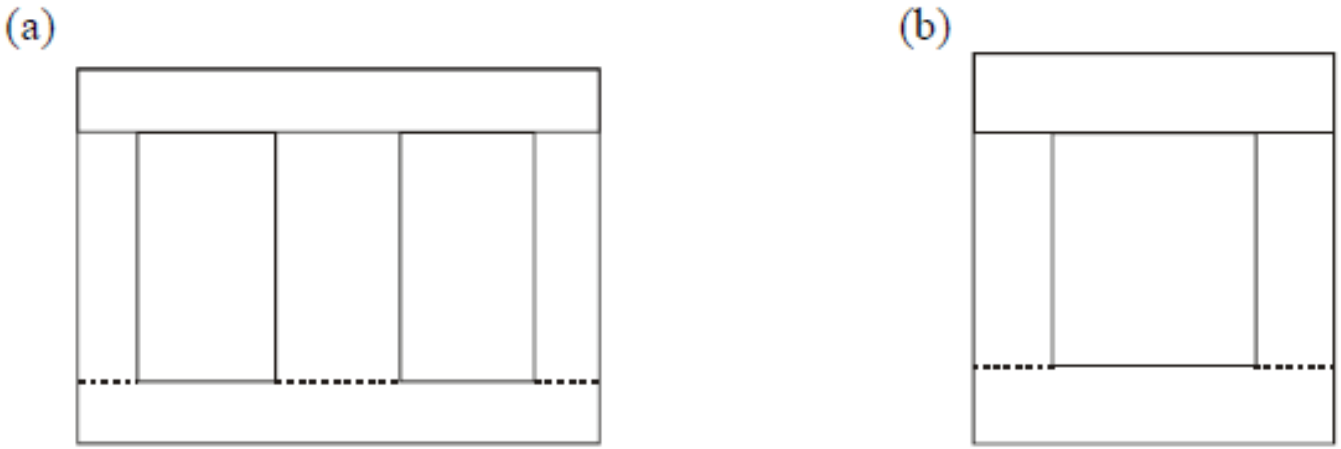

(a) Shell-type transformer, (b) core-type transformer

Core type

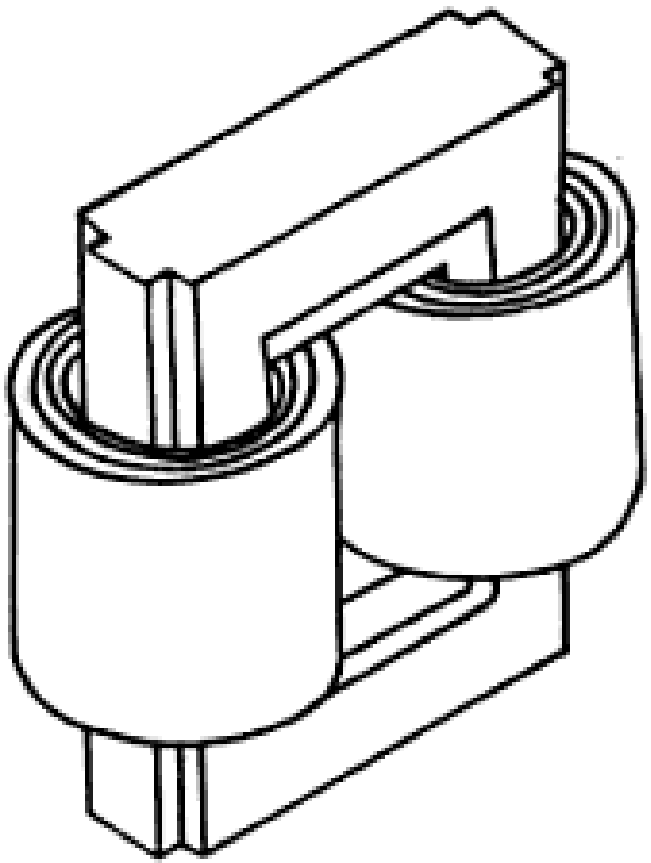

Fig1: Coil and laminations of core type transformer

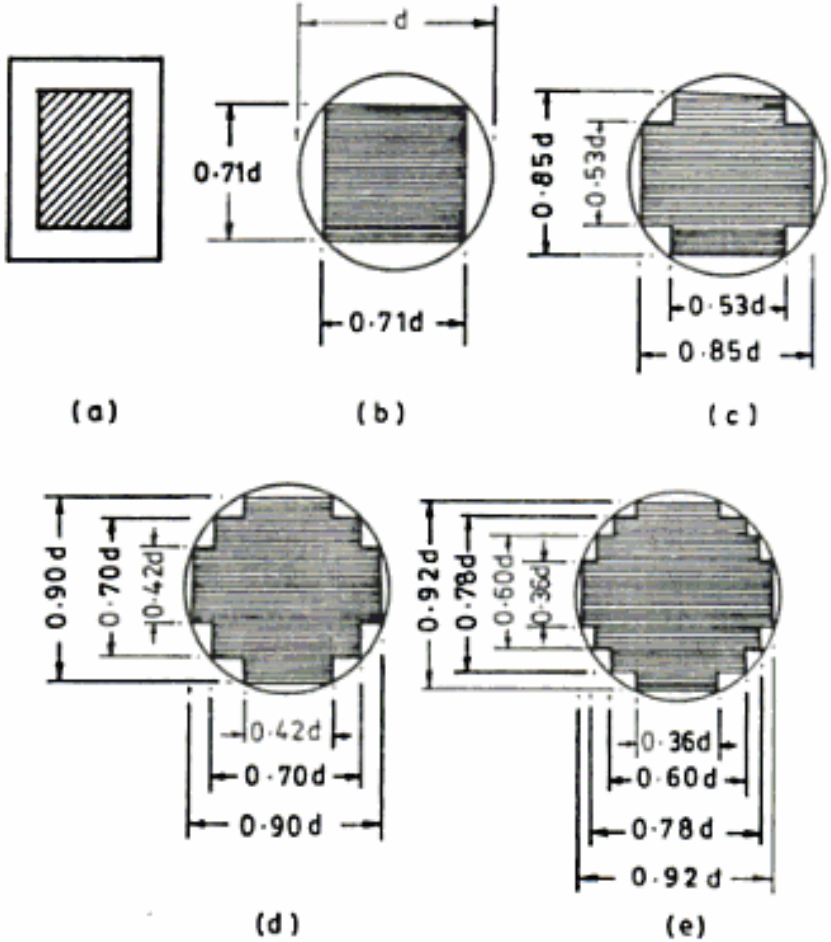

Fig2: Various types of cores

Shell type

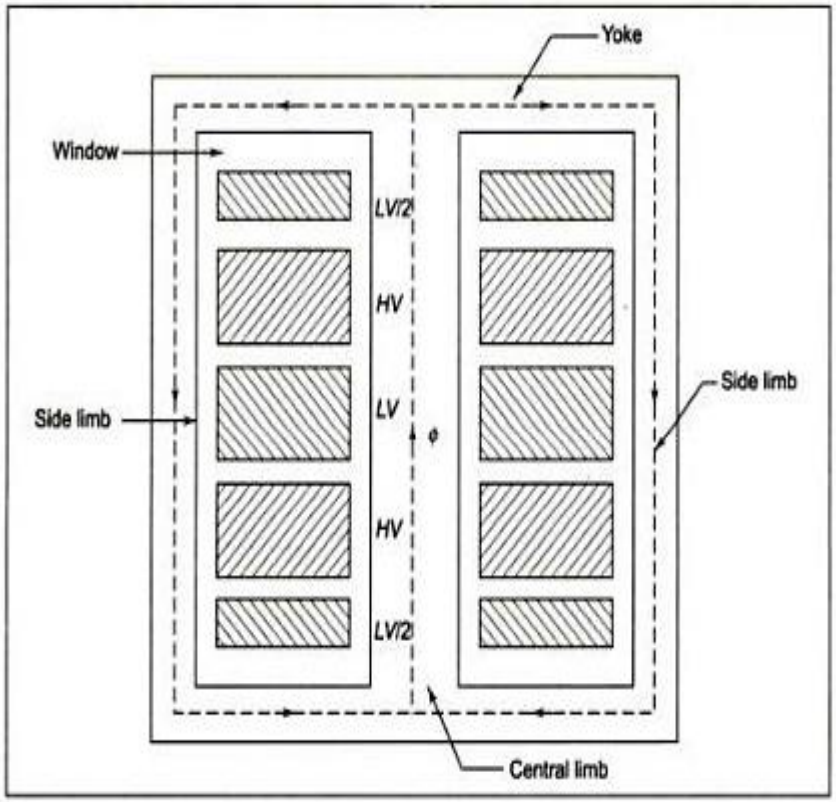

Fig: Sandwich windings

- The HV and LV windings are split into no. of sections
- Where HV winding lies between two LV windings
- In sandwich coils leakage can be controlled

Cut view of transformer

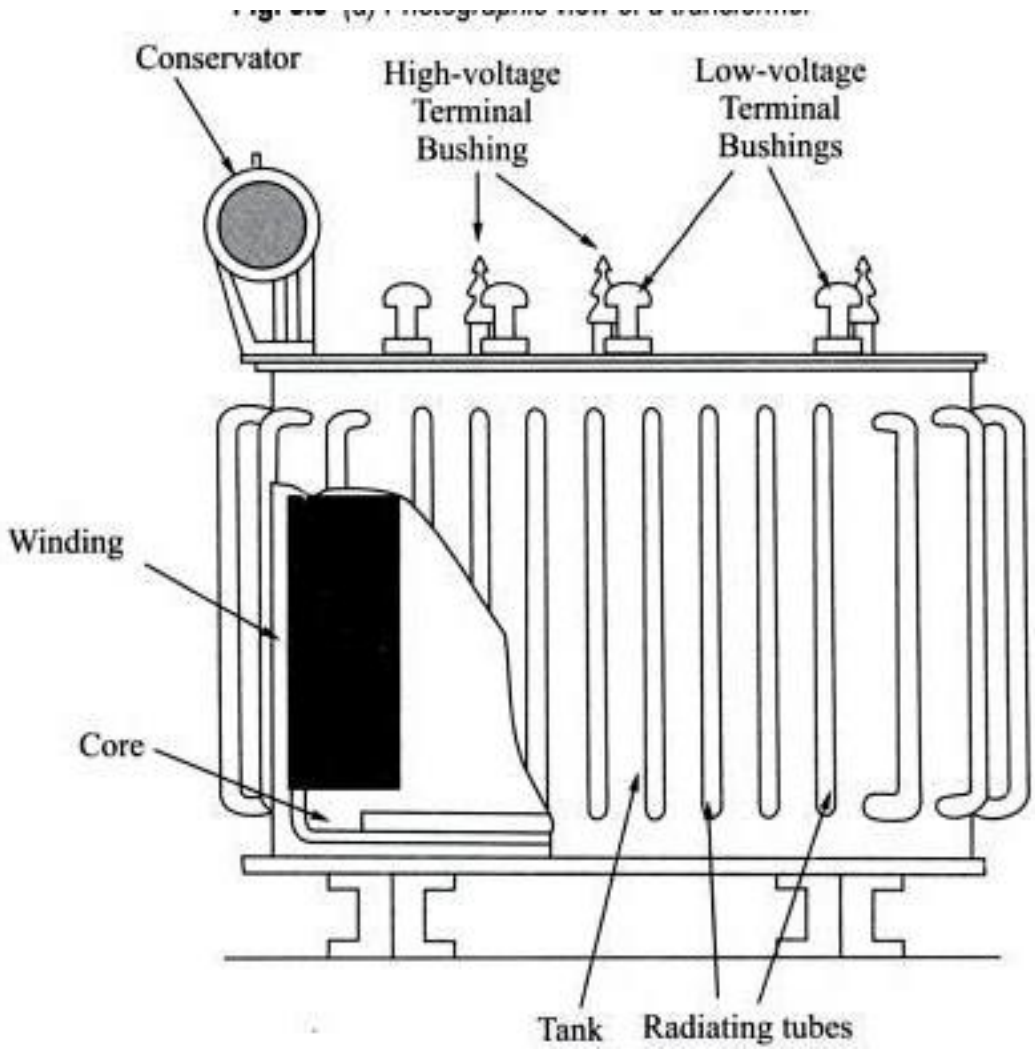

Transformer with conservator and breather

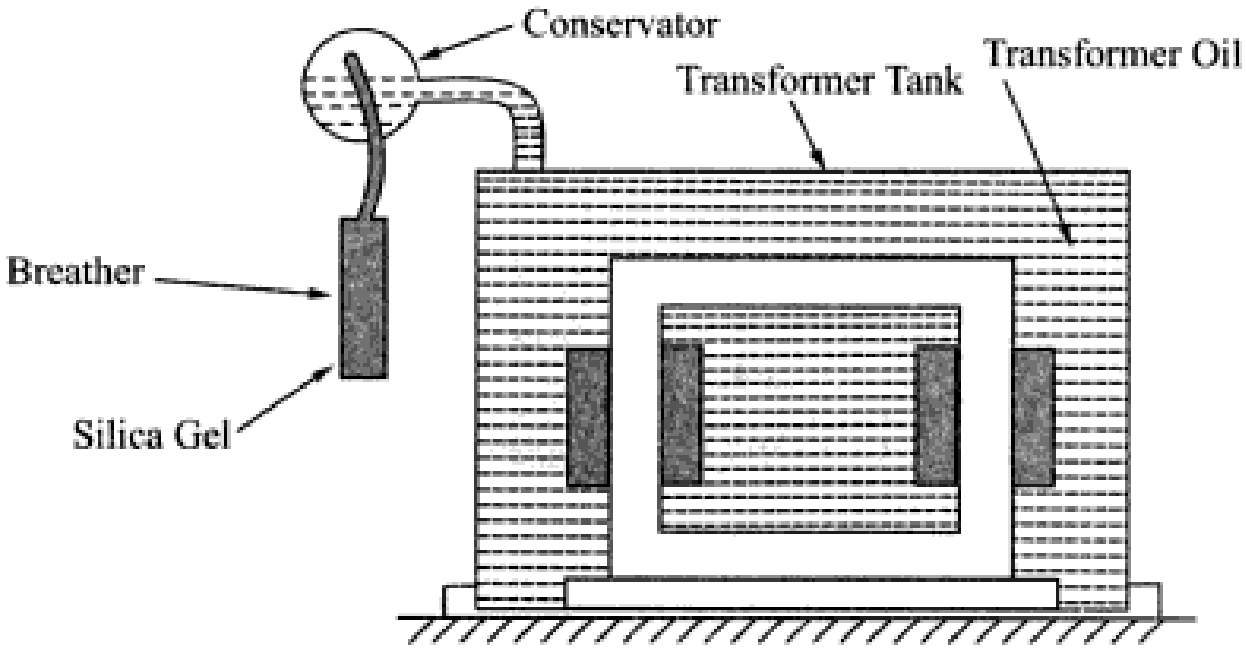

Working of a transformer

1. When current in the primary coil changes being alternating in nature, a changing magnetic field is produced
2. This changing magnetic field gets associated with the secondary through the soft iron core
3. Hence magnetic flux linked with the secondary coil changes.
4. Which induces e.m.f. in the secondary.

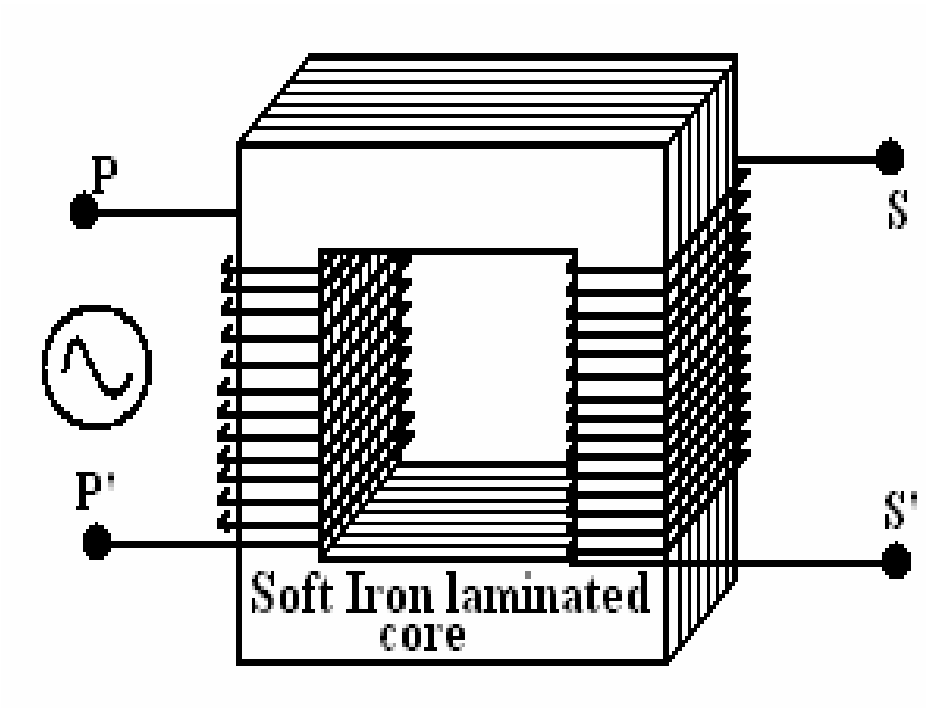

Single Phase Transformer

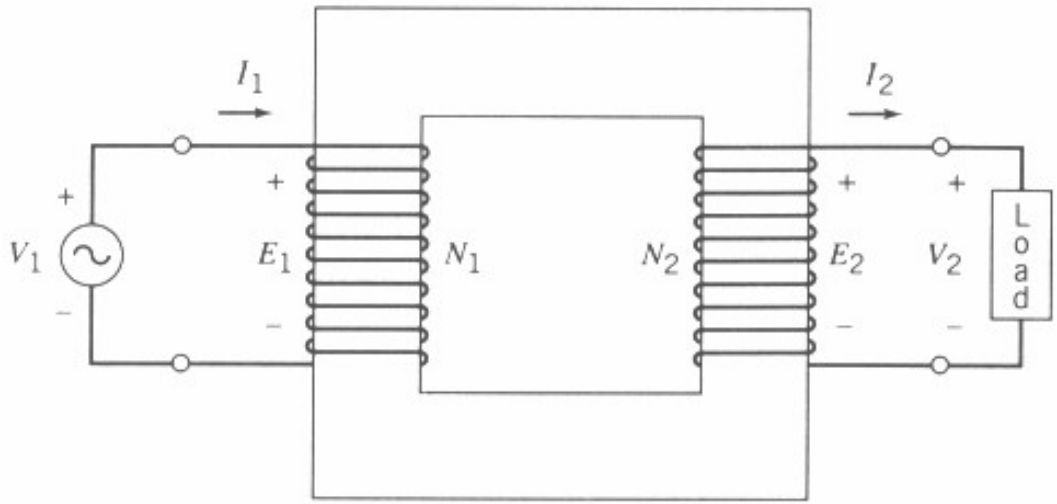

FIGURE 4.8 A transformer circuit.

- A single phase transformer
  - Two or more winding, coupled by a common magnetic core

Ideal Transformers

- **Zero leakage flux:**

  -Fluxes produced by the primary and secondary currents are confined within the core

- **The windings have no resistance:**

  - Induced voltages equal applied voltages

- **The core has infinite permeability**

  - Reluctance of the core is zero

  - Negligible current is required to establish magnetic flux

- **Loss-less magnetic core**

  - No hysteresis or eddy currents

Ideal transformer

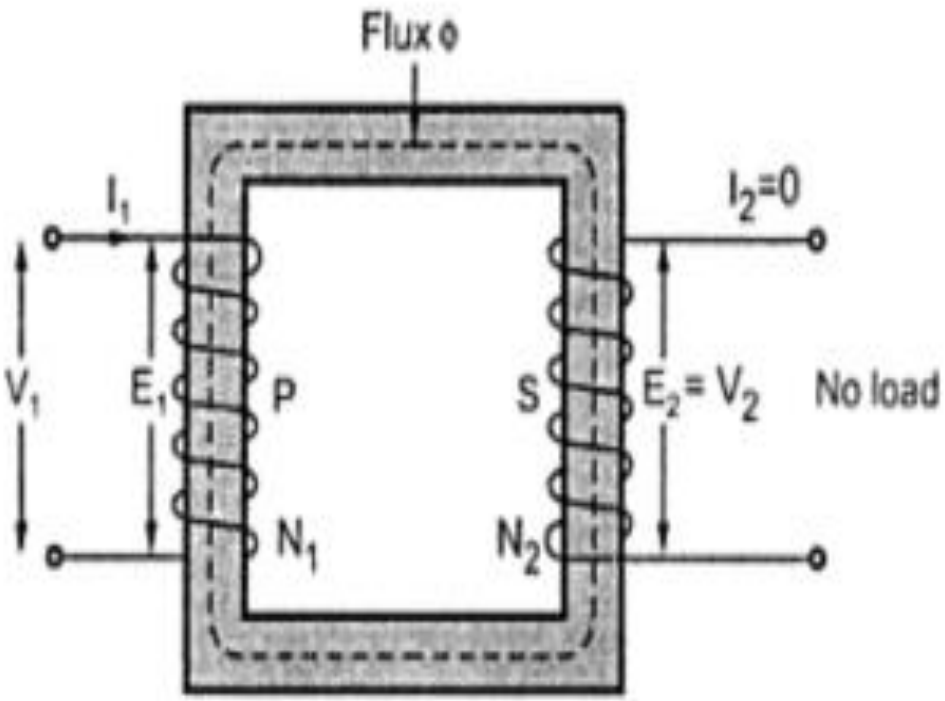

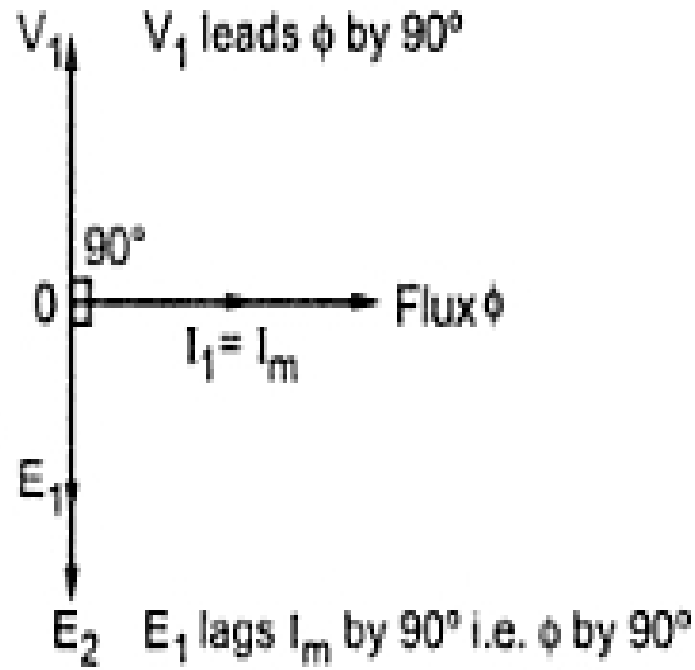

V_1 – supply voltage ; I_1- noload input current ;

V_{2-} output voltgae; I_2- output current

I_m- magnetising current;

E_1-self induced emf ; E_2- mutually induced emf

DC Machine

- A DC machine is an electromechanical energy alteration device. The **working principle of a DC machine** is when electric current flows through a coil within a magnetic field, and then the magnetic force generates a torque which rotates the dc motor

Types of DC machine

- DC generator :The main function of the DC generator is to convert mechanical power to DC electrical power.
- DC motor :DC motor converts DC power to mechanical power.

Construction of DC Machine

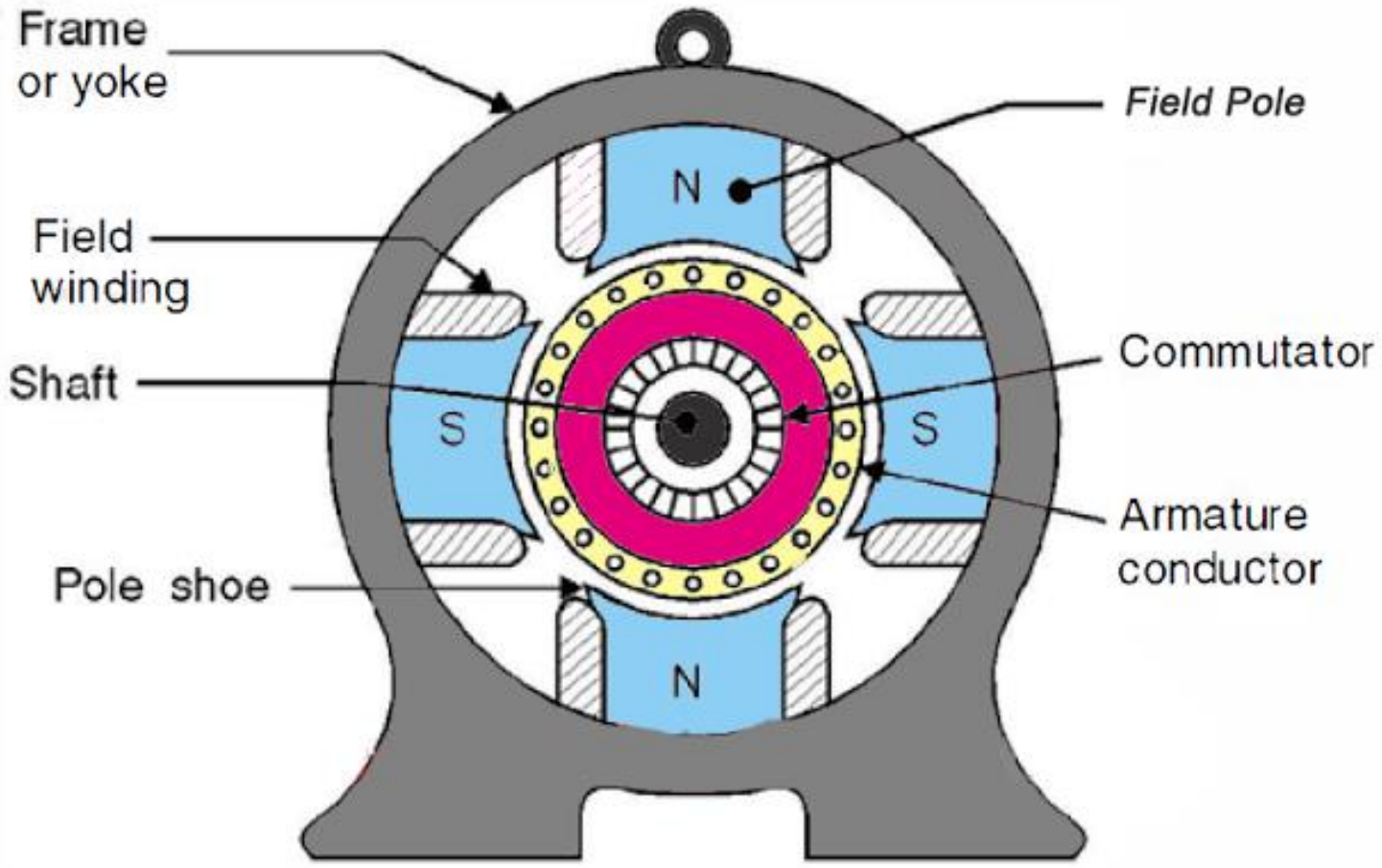

- The construction of DC machine can be done using some of the essential parts like Yoke, Pole core & pole shoes, Pole coil & field coil, Armature core, Armature winding otherwise conductor, commutator, brushes & bearings.
- Some of the **parts of the DC machine** are discussed below.

Parts of DC machine

- *Yoke*
- Another name of a yoke is the frame. The main function of the yoke in the machine is to offer mechanical support intended for poles and protects the entire machine from the moisture, dust, etc. The materials used in the yoke are designed with cast iron, cast steel otherwise rolled steel.
- *Pole and Pole Core*
- The pole of the DC machine is an electromagnet and the field winding is winding among pole. Whenever field winding is energized then the pole gives magnetic flux. The materials used for this are cast steel.

Parts of DC machine

- *Pole Shoe*
- Pole shoe in DC machine is an extensive part as well as enlarge the region of the pole. Because of this region, flux can be spread out within the air-gap as well as extra flux can be passed through the air space toward armature. The materials used to build pole shoe is cast iron otherwise cast steed, and also used annealed steel lamination to reduce the loss of power because of eddy currents.

Parts of DC machine

- *Field Windings*
- In this, the windings are wounded in the region of pole core & named as field coil. Whenever current is supplied through field winding then it electromagnetics the poles which generate required flux. The material used for field windings is copper

Parts of DC machine

- *Armature Core*
- Armature core includes the huge number of slots within its edge. Armature conductor is located in these slots. It provides the low-reluctance path toward the flux generated with field winding. The materials used in this core are permeability low-reluctance materials like iron otherwise cast. The lamination is used to decrease the loss because of the eddy current.

Parts of DC machine

- *Armature Winding*
- The armature winding can be formed by interconnecting the armature conductor. Whenever an armature winding is turned with the help of prime mover then the voltage, as well as magnetic flux, gets induced within it. This winding is allied to an exterior circuit. The materials used for this winding are conducting material like copper

DC machine

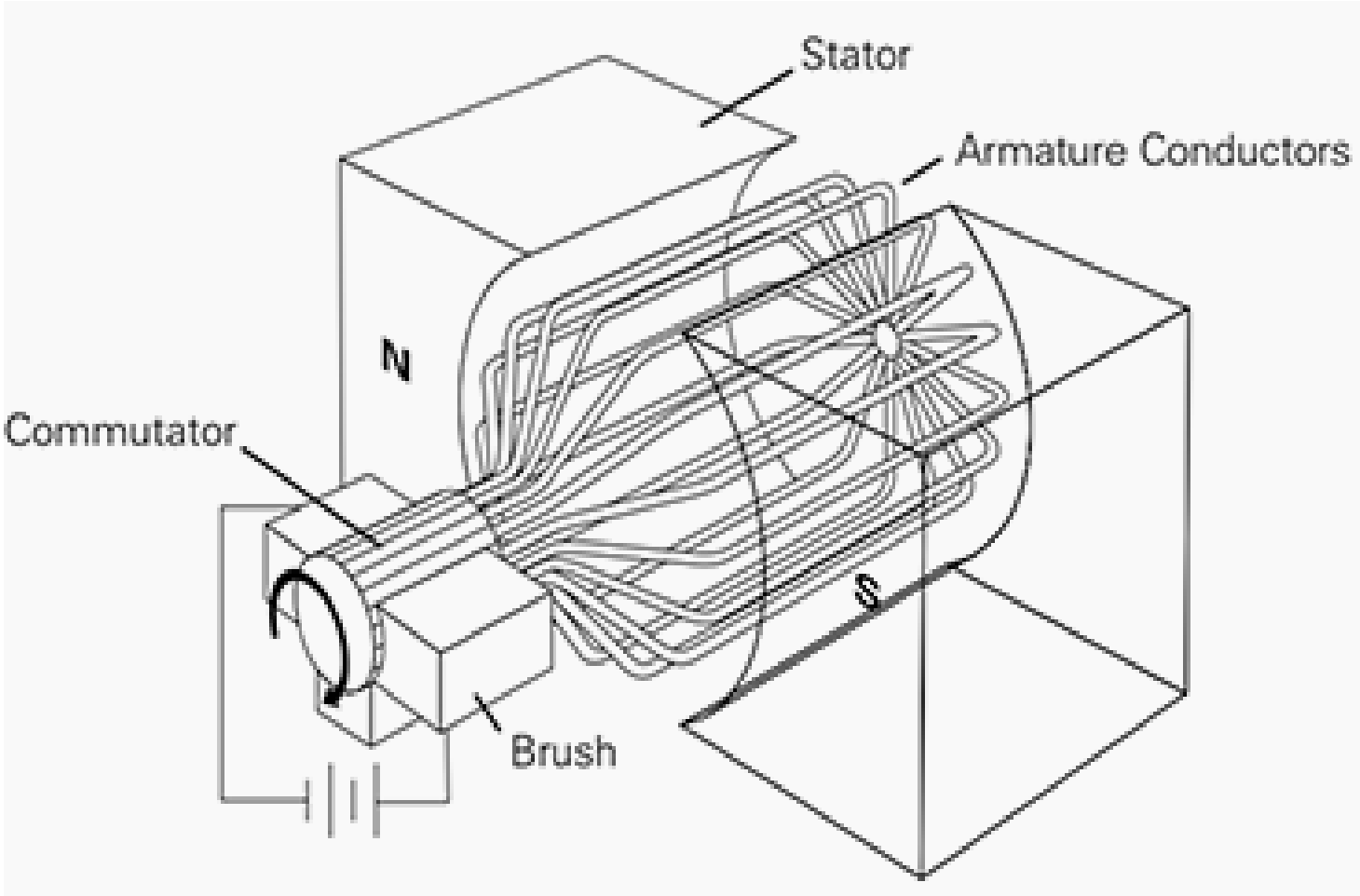

Parts of DC machine

- *Commutator*
- The main function of the commutator in the DC machine is to collect the current from the armature conductor as well as supplies the current to the load using brushes. And also provides uni-directional torque for DC-motor. The commutator can be built with a huge number of segments in the edge form of hard drawn copper. The Segments in the commutator are protected from thin mica layer.

Parts of DC machine

- *Brushes*
- Brushes in the DC machine gather the current from commutator and supplies it to exterior load. Brushes wear with time to inspect frequently. The materials used in brushes are graphite otherwise carbon which is in rectangular form

Types of DC Machines

- The principal kinds of DC machine are classified into four types which include the following.
- Separately excited DC machine
- Shunt wound/shunt machine.
- Series wound/series machine.
- Compound wound / compound machine.

Types of DC Machines

- ***Separately Excited DC Machine***
- In Separately Excited DC Machine, a separate DC source is utilized for activating the field coils.
- In **Shunt wound DC Machines**, the field coils are allied in parallel through the armature. As the shunt field gets the complete o/p voltage of a generator otherwise a motor supply voltage, it is normally made of a huge number of twists of fine wire with a small field current carrying

Types of DC Machines

- In **series wound D.C. Machines**, the field coils are allied in series through the armature. As series field winding gets the armature current, as well as the armature current is huge, due to this the series field winding includes few twists of wire of big cross-sectional region
- ***Compound Wound DC Machine***
- A compound machine includes both the series as well as shunt fields. The two windings are carried-out with every machine pole

Characteristics of DC motors

- Generally, three characteristic curves are considered important for DC motors which are
- (i) Torque vs. armature current
- (ii) Speed vs. armature current and
- (iii) Speed vs. torque.
- These characteristics are determined by keeping the following two relations in mind. $\mathbf{T_a \propto \phi . I_a}$ and $\mathbf{N \propto E_b/\phi}$

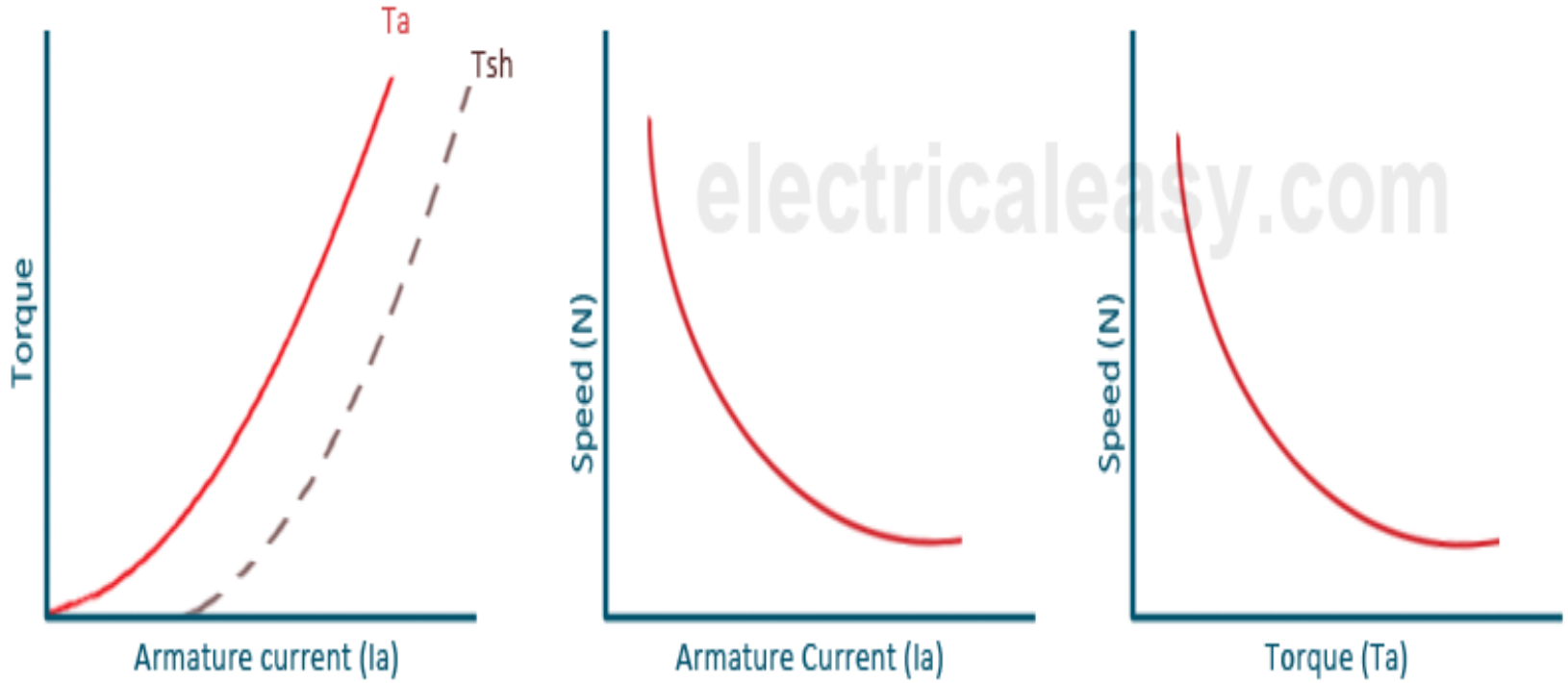

Characteristics of DC series motor

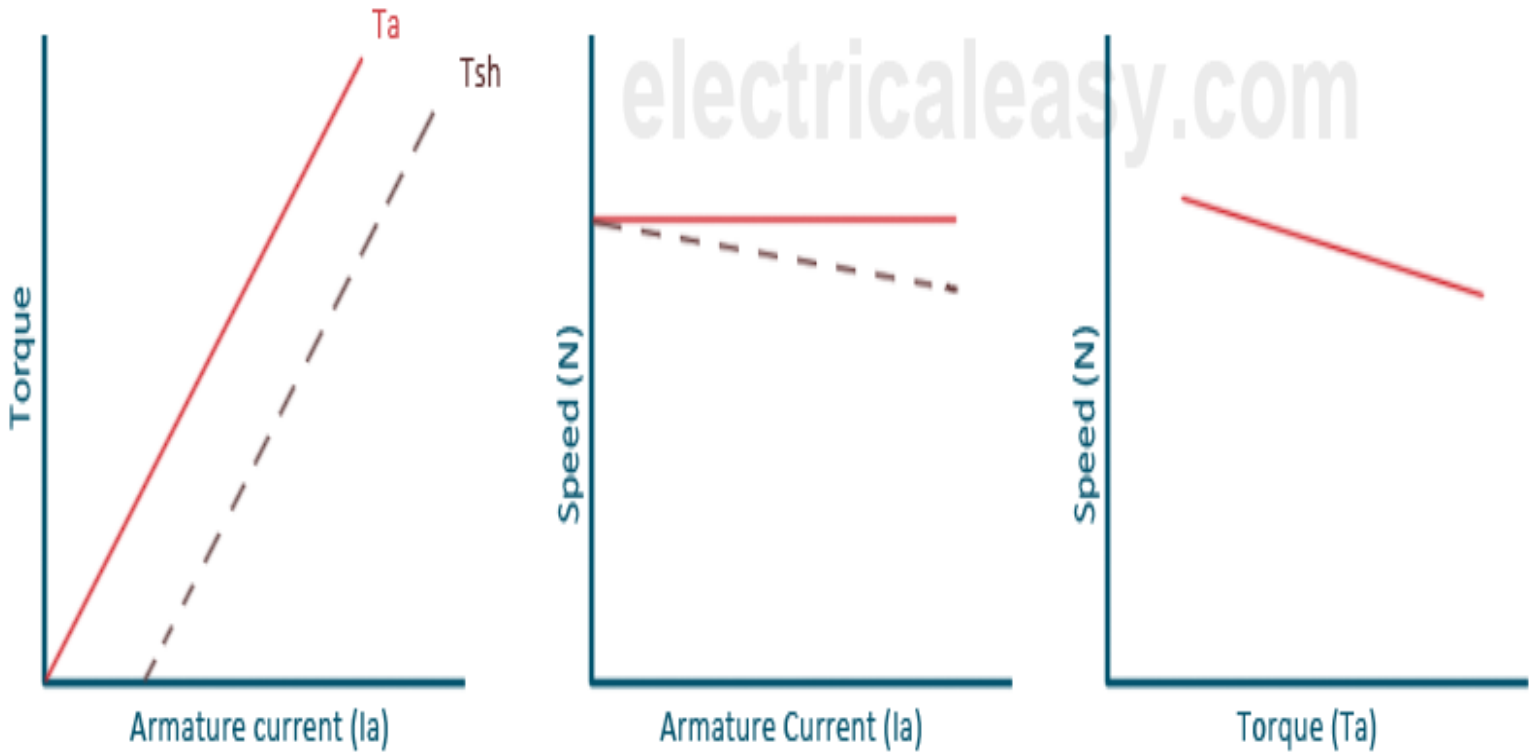

Characteristics of DC shunt motor

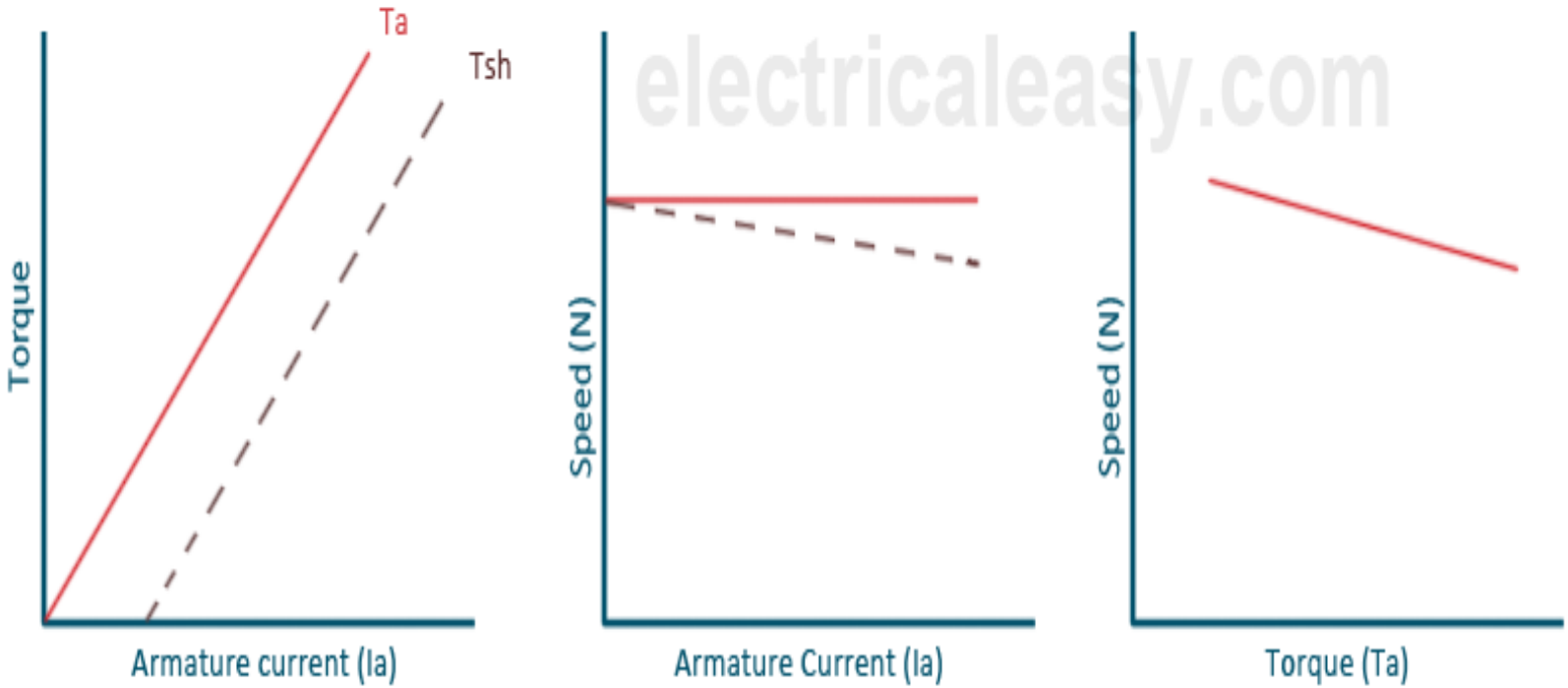

Characteristics of DC shunt motor