PRINCIPLES OF ELECTRICAL ENGG.

Govt. Polytechnic Sector-26 Panchkula
Electrical Engg. Department.
1st Sem/1st Year

Electrical Fundamentals

DIFFERENT FORMS OF ENERGY

- Energy exists in many forms.
- Energy can be moved from one object to another.
- Energy can be changed from one form to another.
- Energy cannot be created or destroyed.

Potential Energy : The energy in matter due to its position or the arrangement of its parts. Energy that can be stored for a long period of time in its present form.

Kinetic Energy: Energy of a moving object. Energy in motion, energy doing work.

SIX FORMS OF ENERGY

- Mechanical Energy
- Electrical energy
- Heat Energy
- Nuclear Energy
- Solar Energy
- Wind Energy
- Chemical Energy

MECHANICAL ENERGY

- Energy that moves objects from place to place
- You use mechanical energy when you kick a ball or turn the pedals of a bicycle
- Other examples include water flowing in a stream, tires rolling down a road and sound waves from your iPod.

CHEMICAL ENERGY

- Energy released by a chemical reaction
- The food you eat contains chemical energy that is released when you digest your meal
- Wood, coal, gasoline, and natural gas are fuels that contain chemical energy

Examples of Chemical Energy

- The chemical bonds in a matchstick store energy sformed mal the ick.

ELECTRICAL ENERGY

- Energy that comes from the electrons within atoms.
- It can be generated at a power plant or inside a battery and can power everything from remote-controlled cars to refrigerators.
- Lightning and static electricity are also forms of electrical energy.

HEAT (THERMAL) ENERGY

- Energy created by the motion of atoms and molecules that occurs within an object
- Thermal energy exists when you heat amount of water on stove.

Nuclear Energy-

- **Energy contained in the nucleus of an atom**
- **Nuclear energy is released when nuclei are split apart into several pieces, or when they are combined to form a single, larger nucleus.**

- ***Uranium is the example of nuclear energy.***

LIGHT (RADIANT) ENERGY

- Energy that can move through empty space
- The sun and stars are powerful sources of radiant energy
- The light given off by light bulbs and campfires are also forms of radiant energy

ENERGY CONVERSION ONE FORM TO ANOTHER FORM :

All forms of energy can be converted into other forms of energy.

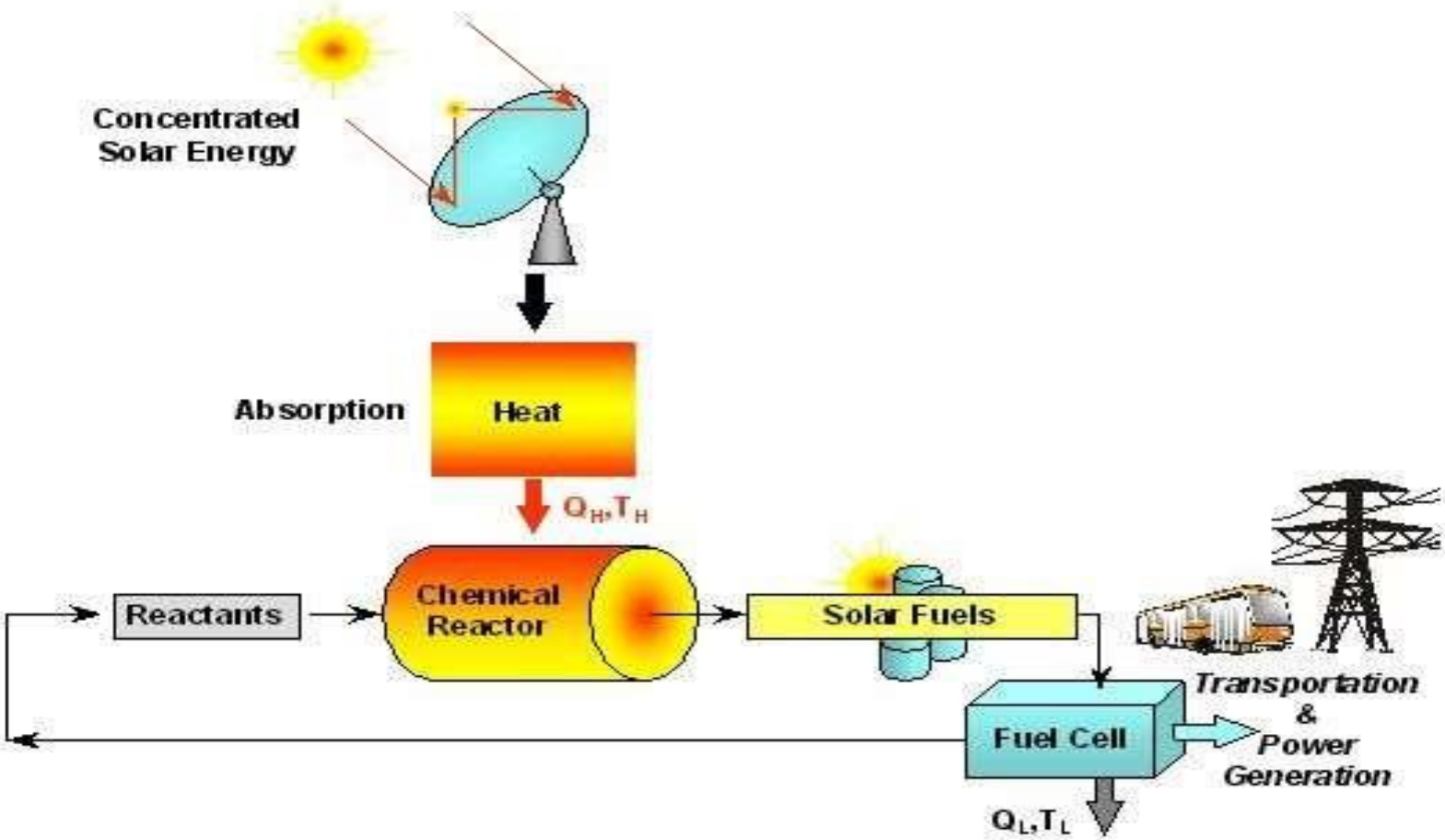

ENERGY TRANSFER

Sound (mechanical)

Electrical

Electrical

Thermal

Mechanical

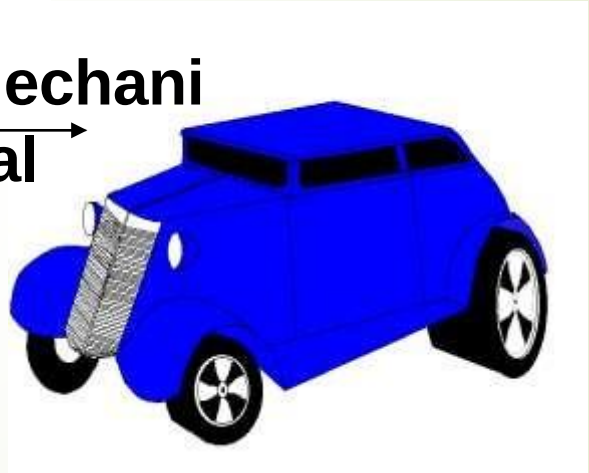

Chemical

Electrical

Light (Electromagnetic)

Advantages of electrical energy over other type of energy :

1. Electric power is very easy to distribute and transport.

2.Its called "Clean and Green energy" . Clean because it doesn' have any byproducts and green because it doesn't cause an kind of pollution neither any of the resources of mothe earth are exhausted when we use this form of energy.

3. It can be easily converted to other form of energy.

4. It is much cheaper than other forms of energy.

5. It can be easily transmitted to various location.

USE OF ELECTRICAL ENERGY

1.It is used for lighting purpose in home , industries and hospital etc.

2. it is used for heating domestic and industries.

Domestic= Heaters ,electrical irons.

Industries = Boiler , heating o- one.

3. It is used in welding . It is used for metal piece joining.

4. It is used in communication purpose with the help of T.v ,computer, telephone and radio etc.

5.In a car battery, the chemical reaction creates an electron which has the energy to move in an electric current. These moving charges provide electrical energy to the circuits in the car.

6.A stove plugged into a wall outlet takes the moving electric charges, electrical energy and changes them into thermal energy by causing the heating coils to get very hot for cooking

THE INTERNATIONAL SYSTEM OF UNITS (SI)

The SI units are based on seven *defined* quantities:

Quantity	Basic Unit	Symbol
Length	meter	m
Mass	kilogram	kg
Time	second	s
Electric current	ampere	A
Thermodynamic temperature	degree kelvin	K
Amount of substance	mole	mol
Luminous	candela	cd

Defined quantities are combines to form **derived units:**

Quantity	Unit Name (Symbol)	Formula
Frequency	hertz (Hz)	s^{-1}
Force	newton (N)	kg.m/ s^2
Energy of work	joule (J)	n.m
Power	watt (W)	J/s
Electric charge	coulomb (C)	A.s
Electric potential	volt (V)	J/C
Electric resistance	ohm ( )	V/A
Electric conductance	siemen (S)	A/V
Electric	farad (F)	C/V

The International System of Units (SI)

Advantage: uses prefixed based on the power of 10:

Prefix	Symbol	Power
atto	a	10^{-18}
femto	f	10^{-15}
pico	p	10^{-12}
nano	n	10^{-9}
micro	μ	10^{-6}
milli	m	10^{-3}
centi	d	10^{-2}
deci	d	10^{-1}
deka	da	10
hecto	h	10^{2}
kilo	k	10^{3}
mega	M	10^{6}
giga	G	10^{9}
tera	T	10^{12}

BASIC CONCEPT OF CHARGE:

- The basic quantity in an electric circuit is the

Charge is an electrical property of the atomic particles of which matter consists, measured in coulombs (C).

- The charge on an electron is *negative* and equal in magnitude

Note:

1. *The Coulomb is a large unit for charges. In 1 C of charge, there are* $1/(1.602 \times 10^{-19}) = 6.24 \times 10^{18}$ *electrons.*
2. *The law of conservation charge states that charge can be neither be created nor destroyed, only transferred.*

Base unit = coulomb

Symbol = Q

Abbreviation = C

BASIC CONCEPT OF ELECTRICAL CURRENT:

- *Flow of charge in a electric circuit is known as electric current . It unites is ampere. It is meas*

1 ampere= 1 coulomb/ second

$$I = \frac{\text{charge}}{\text{time}} = \frac{\text{coulombs}}{\text{seconds}}$$

$$I = \frac{Q}{t} \text{ amperes}$$

- **Two types of current**:

1. *An alternating current (ac) is a current that varies sinusoidally with time (i).*
2. *A direct current (dc) is a current that remains constant with time (I)*

BASIC CONCEPT OF *ELECTRICAL POTENTIAL (VOLTAGE)* :

- Electric pressure that causes current flow

- To move the electron in a conductor in a particular direction requires some work or energy transfer.. It is performed by an *external electromotive force (emf).*

- It is also known as *voltage* or *potential difference*.

Electrical potential = work done \ charge
units = I / C = volt
It is measured by voltmeter

Potential difference : **Difference between two bodies have different electrical potential than a potential difference will be exist between them.**

POWER: The rate at which work is done is an electric current is called electric power. It is measured in watt

$$P = \frac{W}{t} = \frac{\text{joules}}{\text{second}} = \text{watt}$$

$$P = IV$$

A **watt** results when **1 joule of energy** is converted or used in **1 second**

power is the product of voltage and current

- + sign power →power is being delivered to/ absorbed by the element
- - sign power →power is being supplied by the element.
- To determine polarity, use passive sign convention.

ENERGY:

Total amount of work done is an electrical circuit is known as electrical energy.

E = electrical power * time

units of electrical energy = joule and Kwh.

It is measured by kwh meter or energy meter.

Resistance:

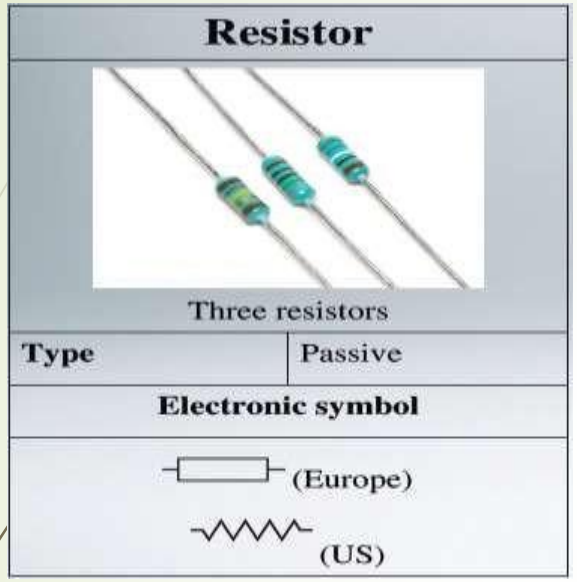

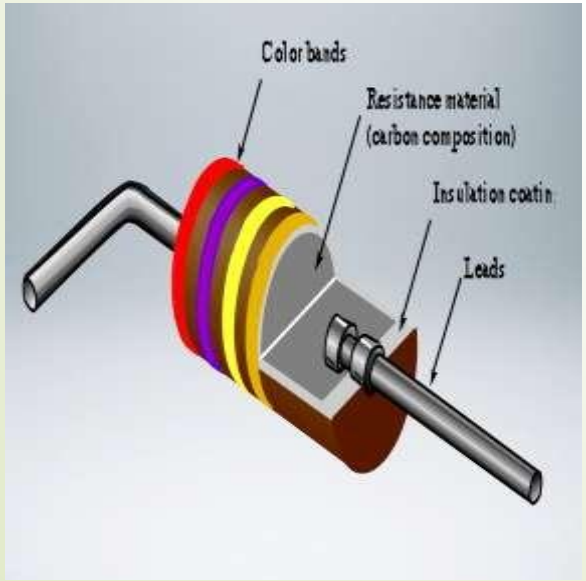

Resistance (R) is the physical property of an element that impedes the flow of current . The units of resistance are **Ohms (Ω)**

Resistivity (ρ) is the ability of a material to resist current flow. The units of resistivity are **Ohm-meters (Ω-m)**

Exam ple:

Resistivity of copper 1.68×10^{-8} Ω·m

Resistivity of glass 10^{10} to 10^{14} Ω·m

Factors upon which Resistance of a conductor depends :

1. Resistance of conductor is directly proportional to length of the conductor. Greater the length , greater the resistance .

   i.e $R \propto l$

2. Area of cross section of the cunductor is inversly proportional to the resistance of the cunductor.greater the area of cross section , lesser the resistance and vice-versa.

   i.e. $R \propto l/a$

3. Resistance offered by cunductors vary as per the nature of the material of cunductor vary.
4. Resistance of conductor increase with temperature and vice-versa.

   we can write:

$$R \propto l/a$$

$$R=\rho\, L/a$$

CONVERSION OF UNITS OF WORK, POWER & ENERGY

- 1 watt = 1 Joule/second
  = 1 N-m/s
  = 10^7 ergs/S
  = $\frac{1}{1.36}$ ft. Lbs/S
- 1 KW = 1000 watt
  = 1000 J/S
  = 1000 N-m/s
  = 10^{10} ergs/S
  = 735 ft. Lbs/ S
  = 1.34 h.p. (British)
  = 1.36 h.p. (Metric)
- 1 B.H.P = 746 watts
- 1 H.P. = 75 Kg-wt m/s = 75x9.81
  = 735.5 watts or joules or Nm/S

  or 1 H.P. = 735.5 kW
- 1 kWh = 1000 watt-hours
  = 3,600,000 watt-sec or joule
  = 36 x 10^{12} ergs = 2.654 x 10^6 ft-Lbs.
- 1 Calorie = 4.18 x 10^7 ergs.
  = 4.18 joule or watt-sec.
- 1 Kcal = 4.18 x 10^7 ergs.
  = 4200 J or watt-sec
  = 1.166 x 10^{-3} kWh
- 1 kWh = 3600000 watt-sec or joules
  = 860 K. cal

RELATION BETWEEN H.P AND TORQUE

If a rotor of radius r metre rotates at a speed of N r.p.m. The force acting on the rotor tangential to its radius is F newtons, then

Work done in one revolution = Force x distance covered

= F x 2πr = 2πT Nm or J

where T is the torque i.e. moment acting on the rotor.

Work done per minute = 2πNT (since revolution made per minute is N)

Work done/sec or power = 2πNT/60 J/sec or watts

DC CIRCUITS

Electrical circuit : The close path flows by the electric circuit is known as electrical circuit.

DC circuits : The close path which DC current is flow is known as DC circuits.

Ohm's law : The current flowing between the end of the conductor is directly proportional to the potential difference across the end of the conductor with the physical condition, temp. pressure etc. don't change.

Mathematically,

$$I \propto V$$

or $$V / I = \text{constant}$$

This constant is called the resistance of the conductor.

$$V / I = R$$

The ohm's law is verified , if the graph between V&I at different values is a straight line as shown in fig,.

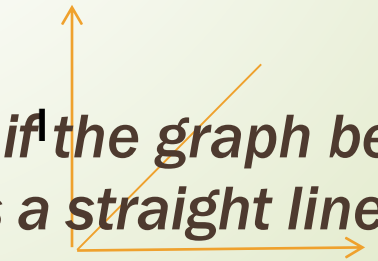

Volta
ge

- ***Limitations of Ohm's Law :***

I. It does not apply on the unilateral networks.

II. It does not apply on the non-linear networks , the parameter of the network is vary with the voltage and current. Their parameters like resistance, inductance, capacitance and frequency etc. do not remain constant with time. So, ohm's law is not applicable to the non-linear networks.

- ***Applications of Ohm' s Law:***

1. It can be applied to D.C as well as A. C circuit.
2. To find out the value resistance of the circuit and also for knowing the voltage and current of the circuit.

Resistance in series:

The circuit in which resistance are connected end to end so that they connected from one path for the flow of current than resistance are called connected in series and such circuit is called series circuit .

As shown in fig below resistance between point A and D is equal to the sum of three individual resistances. The current enters in to the point A of the combination, will also leave from point D as there is no other parallel path provided in the circuit. Now say this current is I. So this current I will pass through the resistance R_1, R_2 and R_3.

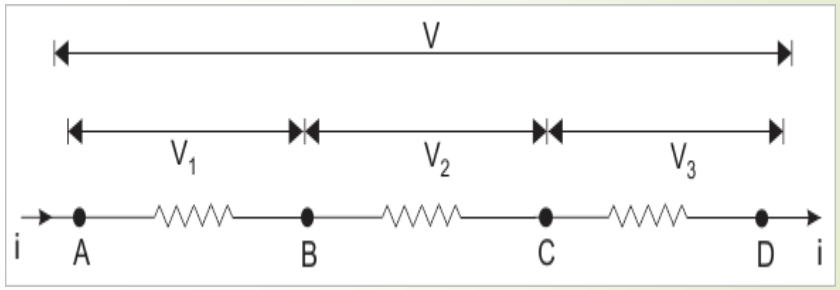

voltage drop across R1 , V1 = IR1

R2 , V2= IR2

R3 , V3= IR3

Since, sum of voltage drops across the individual resistance is nothing but the equal to applied voltage across the combination

Total voltage V = V1+V2+V3

V = IR1+IR2+IR3

V/ I = R1+R2+R3 then according to Ohm's law, V = IR

R = R1+R2+R3

So, the above proof shows that equivalent resistance of a combination of resistances in series is equal to the sum of individual resistance. If there were n number of resistances instead $R = R_1 + R_2 + R_3 + \ldots\ldots\ldots R_n$ istan

Resistances in Parallel:

The circuit in which one end of each resistor is collected to common point and the other end of each resistor is connected to another common point so that they are many path for current flow then resistor are said to be connected in parallel and such circuit is called parallel circuit

As this current will get three parallel paths through these three electrical resistances, the current will be divided into three parts. Say currents I_1, I_1 and I_1 passes through resistor R_1, R_2 and R_3 respectively.

Acc to ohm's law

Current in resistance $R1 , I1 = V / R1$

$R2 , I2 = V / R2$

$R3 , I3 = V / R3$

Total current $I = I1 + I2 + I3$

$I = V / R1 + V / R2 + V / R3$

$I = V[1 / R1 + 1 / R2 + 1 / R3$

$1 / R = 1 / R1 + 1 / R2 + 1 / R3$

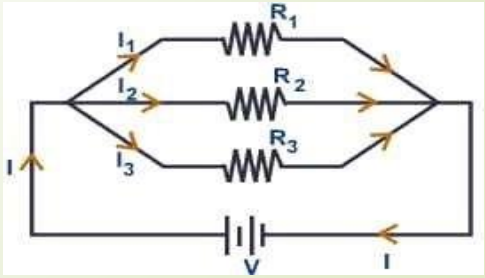

The above expression represents equivalent resistance of resistor in parallel. If there were n number of resistances connected in parallel, instead of three resistances, the expression of equivalent resistance would be written as

$$\left(\frac{1}{R_1}+\frac{1}{R_2}+\frac{1}{R_3}+\cdots\cdots+\frac{1}{R_n}\right)^{-1}$$

Hence, the number of resistor are connected in parallel reciprocal of total resistance is equal to the reciprocal sum of individual resistors.

i. ***Voltage across each resistances of the parallel combinations is same.***
ii. ***Current in each branch is given by the ohm law and total current is equal to the sum of branch current.***
iii. ***Different resistance have individual current.***
iv. ***Reciprocal of the total resistance is equal to the same of the reciprocal sum of the individual resistors.***

Application of parallel circuit : ***In the domestic installation all the electrical appliances are connected in parallel across the supply so that voltage across each appliance is same . The reason for connecting the appliances in parallel are due to***

i. ***Electrical appliances are rated for same voltage and operate efficiently when supplied with this rated voltage.***
ii. ***When appliances are connected in parallel each operate independently of***

Kirchhoff's current law(KCL) : *The algebraic sum of all the current meeting at any junction in an electric circuit is zero. This is called the Kirchhoff's current law . If we take the sign of current following towards point O is taken as +ve an*

following away from the point O is taken as the –ve s

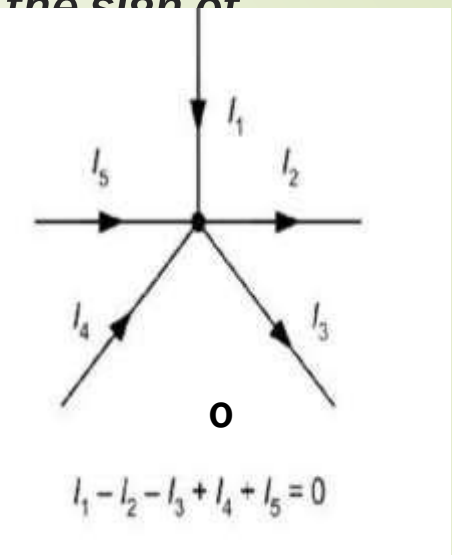

$$+ I1 + I2 + (- I3) + I4 + (- I5) = 0$$

$$I1 + I2 + I4 = I3 + I5$$

Incoming current = Outgoing current

$$\sum_{n=1}^{N} i_n = 0$$

$$\sum_{\text{node}} i_{enter} = \sum_{\text{node}} i_{leave}$$

Where N is the total number of branches connected to a node.

Kirchhoff's voltage law (KVL) : *In any closed circuit the algebraic sum of the product of current and resistance(voltage drop) plus the algebraic sum of all the e.m.f in that* circuit is equal to the *zero is called Kirchhoff's voltage law.*

i. ***Sign of e.m.f :*** *A rise in a potential is considered as +ve while fall in potential is considered as negative.*

ii. ***Sign of voltage drop :*** *There is voltage drop in resistance due to the flow of current through it . If we go with the current then voltage drop should be taken as –ve where as if we go against the current flow, then voltage drop should be taken as positive.*

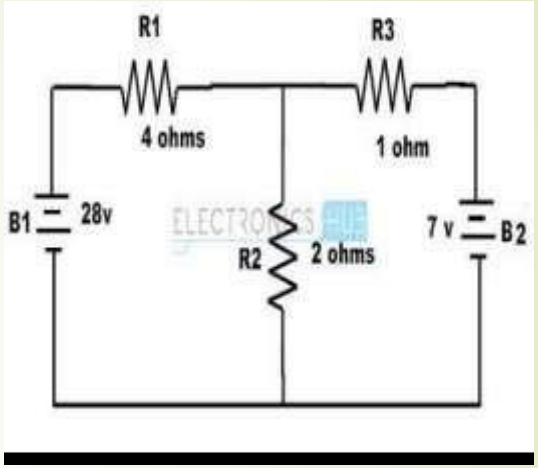

Consider closed circuit ABCFA

Voltage drop in R_1=-$(I_1+I_2)R_1$

By applying KVL to this loop

$$-(I_1+I_2)R_1+E_1=0$$

Or $E_1=(I_1+I_2)R_1$

Now consider loop CDEFC

Voltage drop in R_2 $=+I_2R_2$

By applying KVL to this loop

$$I_2R_2+(I_1+I_2)R_1-E_2=0$$

Or $E_2= I_2R_2+(I_1+I_2)R_1$

THEVENIN'S THEOREM:

- Thevenin's theorem simplifies the process of solving for the unknown values of voltage and current in a network by reducing the network to an equivalent series circuit connected to any pair of network terminals.
- Any network with two open terminals can be replaced by a **single voltage source (V_{TH})** and a **series resistance (R_{TH})** connected to the open terminals. A component can be removed to produce the open terminals.

Vth = open circuit voltage between two terminals (known's as the Thevenin's equivalent voltage source. This is obtained by removing load resistance (R_L)and find out the potential difference across the open terminal of R_L. V_{TH} is determined by calculating the voltage between open terminals A and B.

R_{th} =It is the Thevenin's equivalent resistance which can be obtained by shorting the voltage source and calculating the circuit's total resistance as seen from open terminals A and B

THEVENIN'S THEOREM:

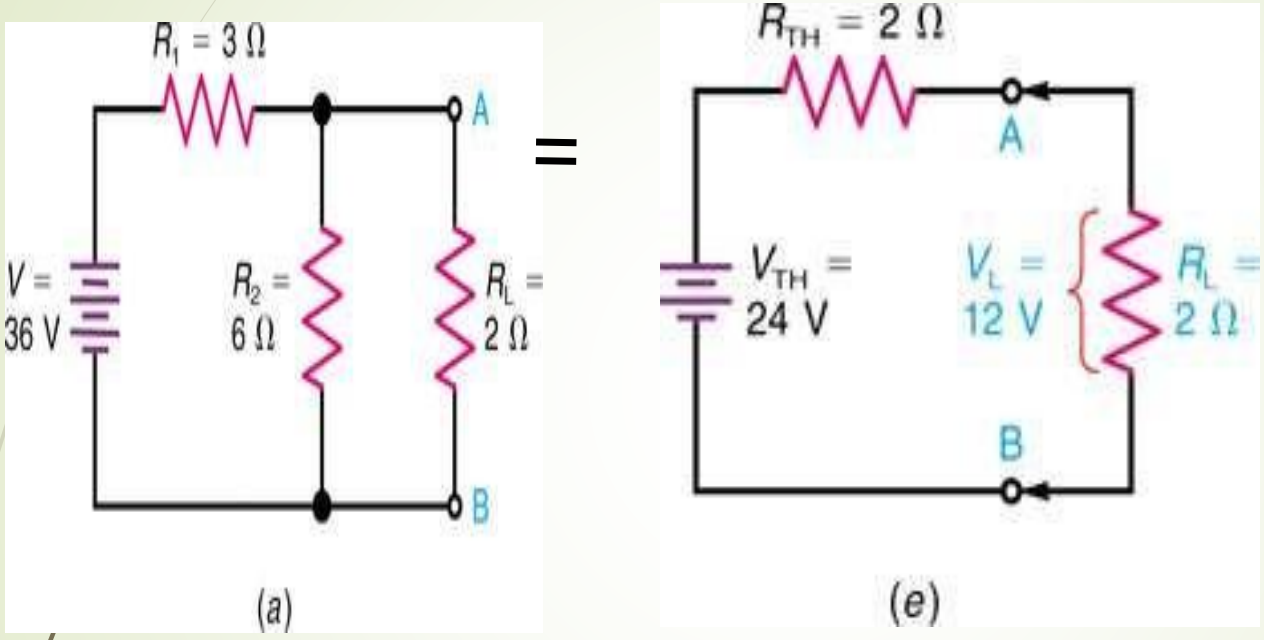

Fig. 1 Application of Thevenin's theorem. (*a*) Actual circuit with terminals A and B across R_L. (*b*) Disconnect R_L to find that V_{AB} is 24V. (*c*) Short-circuit V to find that R_{AB} is 2Ω.

THEVENIN'S THEOREM

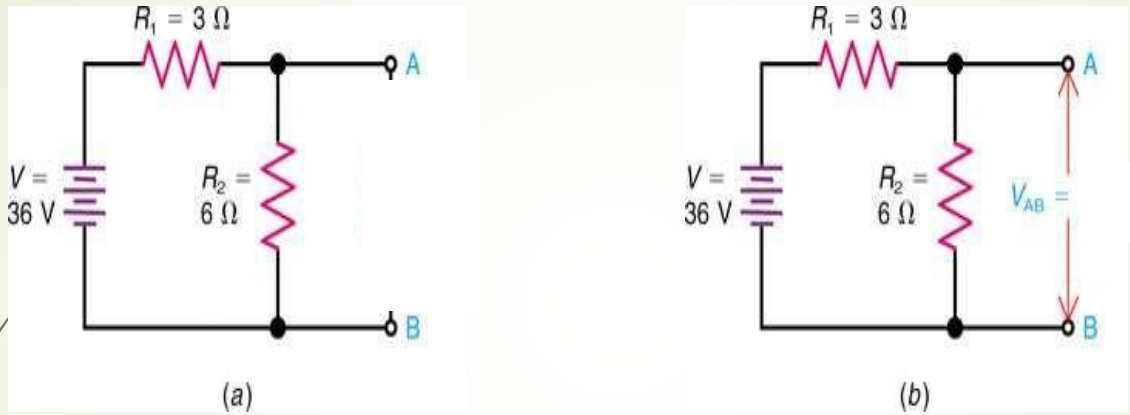

$$V_{R2} := 36V \cdot \frac{6\Omega}{3\Omega + 6\Omega} \qquad V_{R2} = 24\,V \qquad V_{AB} := V_{R2}$$

Fig. 2 Application of Thevenin's theorem. (*a*) Actual circuit with terminals A and B across R_L. (*b*) Disconnect R_L to find that V_{AB} is 24V. (*c*) Short-circuit V to find that R_{AB} is 2Ω.

THEVENIN'S THEOREM

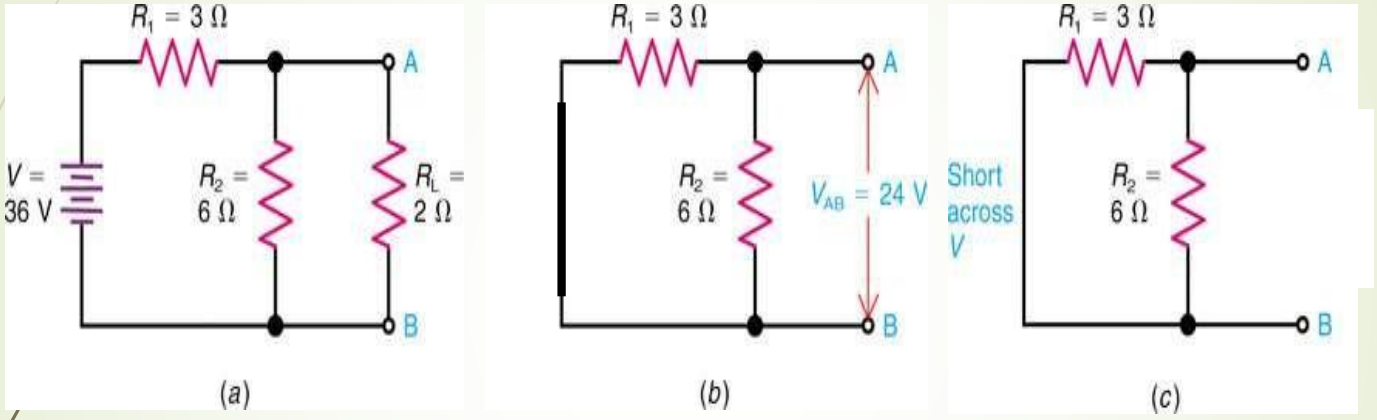

$$R_{TH} := \frac{3\Omega \cdot 6\Omega}{3\Omega + 6\Omega} \qquad R_{TH} = 2\Omega$$

Fig. 3: Application of Thevenin's theorem. (*a*) Actual circuit with terminals A and B across R_L. (*b*) Disconnect R_L to find that V_{AB} is 24V. (*c*) Short-circuit V to find that R_{AB} is 2Ω.

THEVENIN'S THEOREM

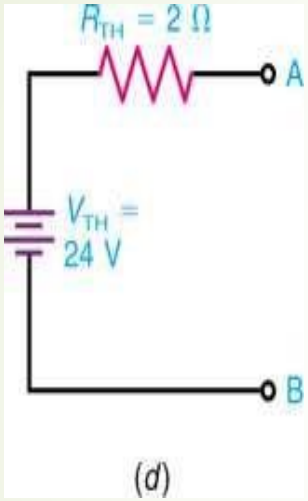

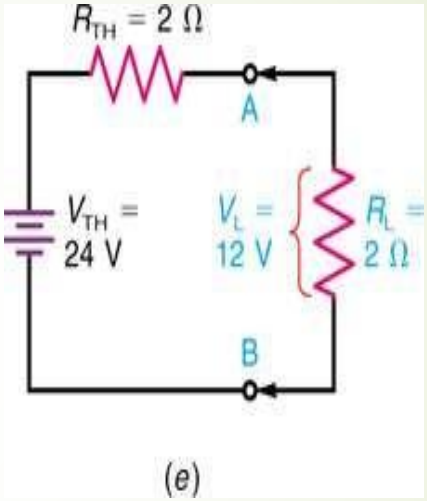

Fig.4 (*d*) Thevenin equivalent circuit. (*e*) Reconnect R_L at terminals A and B to find that V_L is 12V.

THEVENIN'S THEOREM

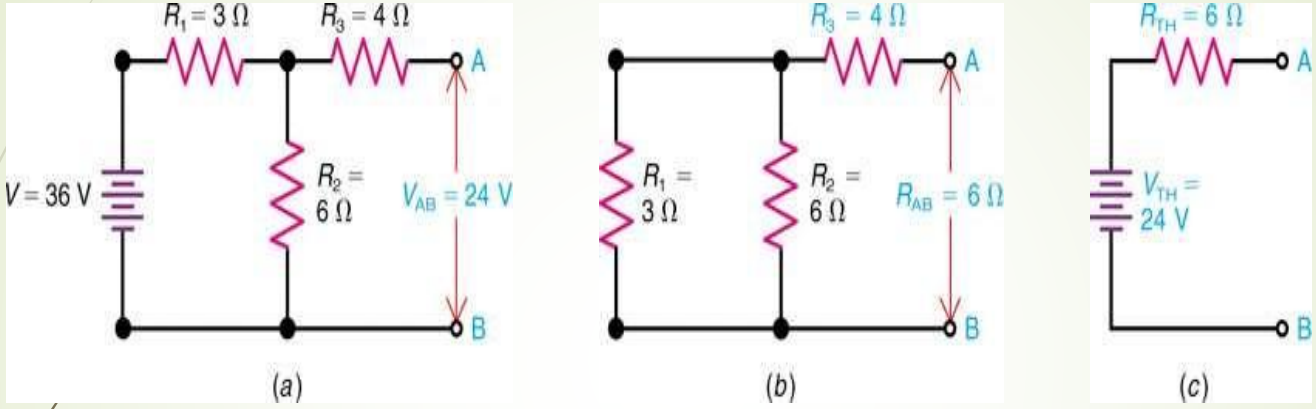

Note that $\mathbf{R_3}$ does not change the value of $\mathbf{V_{AB}}$ produced by the source V, but R_3 <u>does</u> increase the value of $\mathbf{R_{TH}}$.

$$R_{TH} := \frac{3\Omega \cdot 6\Omega}{3\Omega + 6\Omega} + 4\Omega \qquad R_{TH} = 6\,\Omega$$

Fig. :5 Thevenizing the circuit of Fig. 3 but with a 4-Ω R_3 in series with the A terminal. (*a*) V_{AB} is still 24V. (*b*) Now the R_{AB} is 2 + 4 = 6 Ω. (*c*) Thevenin equivalent circuit.

NORTON'S THEOREM:

- Norton's theorem is used to simplify a network in terms of currents instead of voltages.
- It reduces a network to a simple parallel circuit with a current source (comparable to a voltage source).
- Norton's theorem states that any network with two terminals can be replaced by a single current source and parallel resistance connected acro s the terminals.

Thevenin-Norton Conversions:

- Thevenin's theorem says that any network can be represented by a voltage source and series resistance.
- **Norton's theorem** says that the same network can be represented by a current source and shunt resistance.
- Therefore, it is possible to convert directly from a Thevenin form to a a Norton form and vice versa.
- Thevenin-Norton conversions are often useful.

MAXIMUM POWER TRANSFER

- For any power source, the maximum power transferred from the power source to the load is when the resistance of the load R_L is equal to the equivalent or input resistance of the power source ($R_{in} = R_{Th}$ or R_N).
  - The process used to make $R_L = R_{in}$ is called impedance matching.

FIND THE VALUE OF R_{LOAD} THAT MAXIMIZES POWER

$$\frac{dP}{dR_L} = V_{Th}^2 \left(\frac{(R_{Th} + R_L)^2 - 2R_L(R_{Th} + R_L)}{(R_{Th} + R_L)^4} \right) = 0$$

$$\boxed{(R_{Th} + R_L)^2} = 2R_{load}(R_{Th} + R_L)$$

$$R_L = R_{Th}$$

THE MAXIMUM POWER DELIVERED TO THE LOAD

$$p_{max} = I^2 R_L = \frac{V_{Th}^2}{(2R_L)^2} R_L$$

$$p_{max} = \frac{V_{Th}^2}{4R_L}$$

POWER TRANSFER CALCULATION

$$P_L = V_L^2 / R_L$$

$$P_L = \frac{\left[\frac{R_L}{R_L + R_{Th}} V_{Th}\right]^2}{R_L}$$

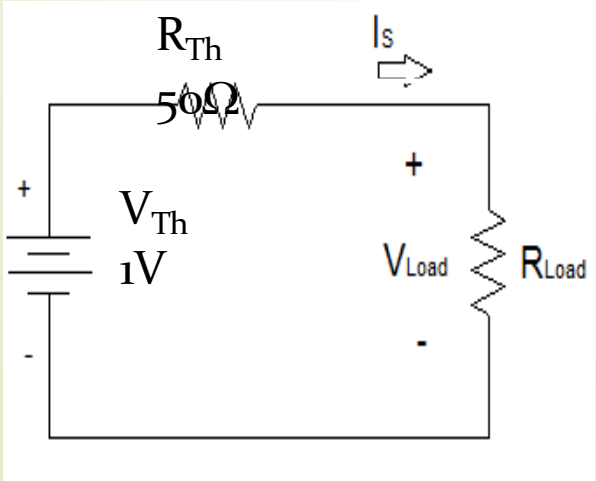

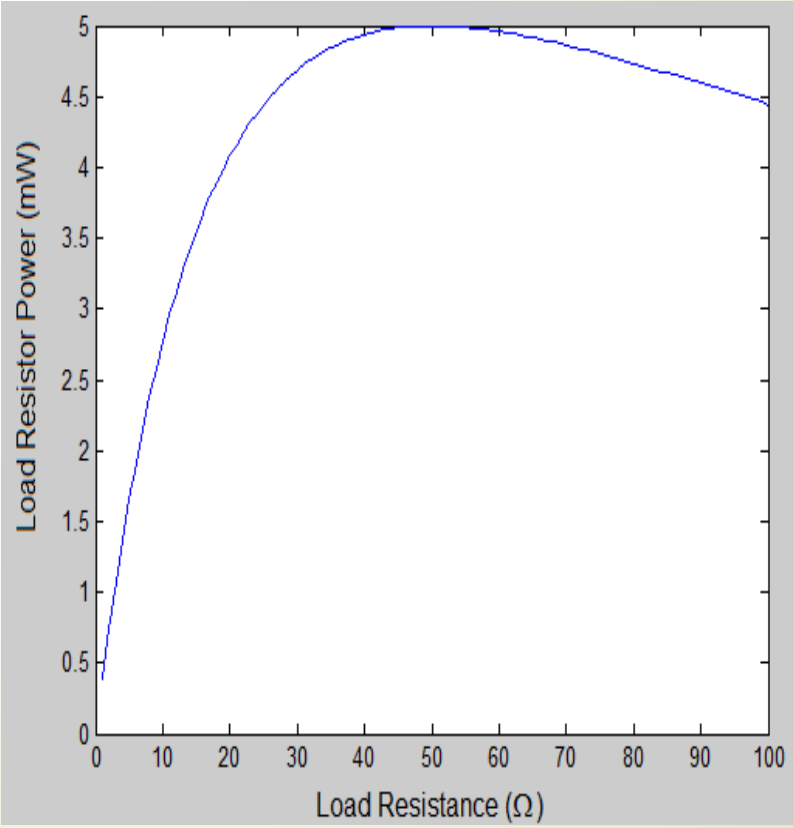

APPLICATION

- When developing new circuits for a known application, optimize the power transfer by designing the circuit to have an input resistance close to the load resistance.
- When selecting a source to power a circuit, one of the selection criteria is to match the input impedance to the load resistance.

Δ – Y CONVERSION

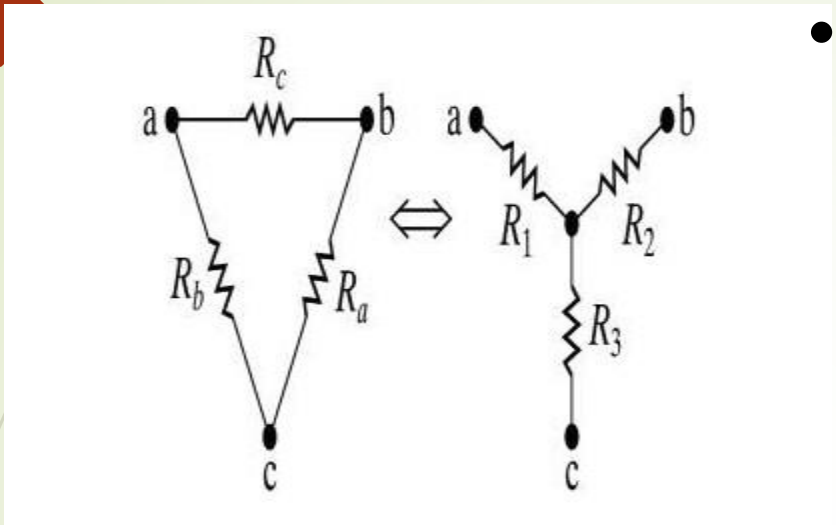

$$R_{ab} = \frac{R_c(R_a + R_b)}{R_a + R_b + R_c} = R_1 + R_2$$

$$R_{bc} = \frac{R_a(R_b + R_c)}{R_a + R_b + R_c} = R_2 + R_3$$

$$R_{ca} = \frac{R_b(R_c + R_a)}{R_a + R_b + R_c} = R_1 + R_3$$

- The resistance between the terminal pairs must be the same for both circuits

Y – Δ CONVERSION

- After some algebraic manipulation

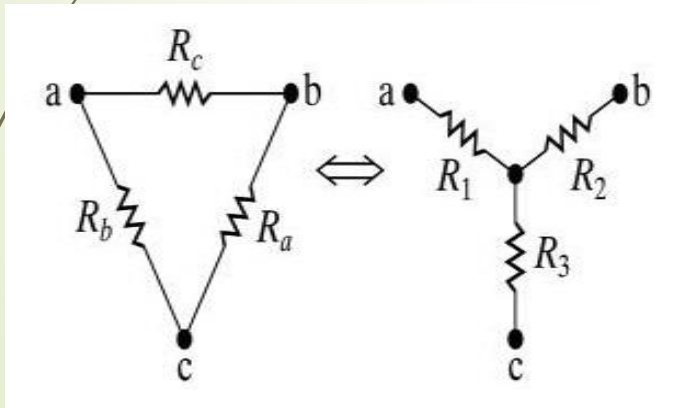

$$R_a = \frac{R_1R_2 + R_2R_3 + R_3R_1}{R_1}$$

$$R_b = \frac{R_1R_2 + R_2R_3 + R_3R_1}{R_2}$$

$$R_c = \frac{R_1R_2 + R_2R_3 + R_3R_1}{R_3}$$

CELL AND BATTERIES

DefinitionofCell:

- A primary cell cannot be recharged because the internal chemical reaction cannot be restored.
  Example: ZINC CARBON (1.5V),ALKALINE (1.5V)

- A secondary cell, or storage cell, can be recharged because its chemical reaction is reversible.
  Example: LEAD **ACID (2.0V),NICKEL - CADMIUM (1.2V),NICKEL - METAL HYDRIDE (1.2V),LITHIUM – ION (3.3V)**

THE VOLTAIC CELL

- Motion of electrons in ionic bonding can be used to generate an electric current
- Adevice constructed to do just this is called a **voltaic cell**, or **cell** for short

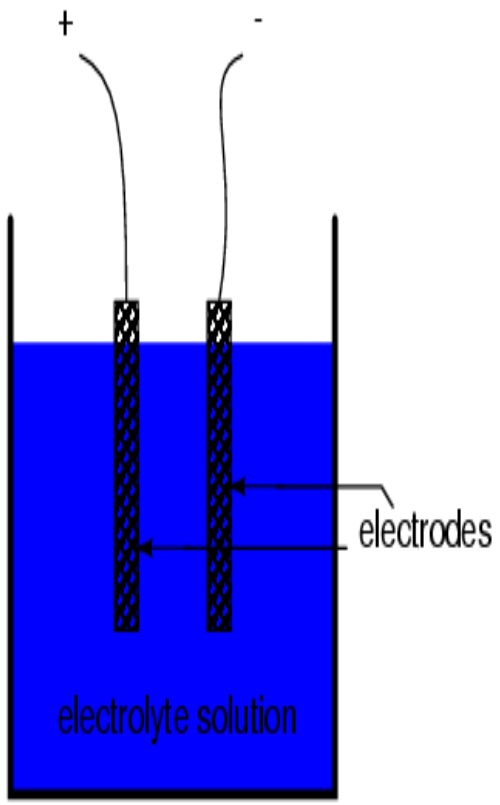

The two electrodes are made of different materials, both of which chemically react with the electrolyte in some form of ionic bonding.

LEAD ACID BATTERY:

- Electrolyte for the most part distilled (pure) water, with some sulfuric acid mixed with the water.
- Electrodes must be of dissimilar metals.

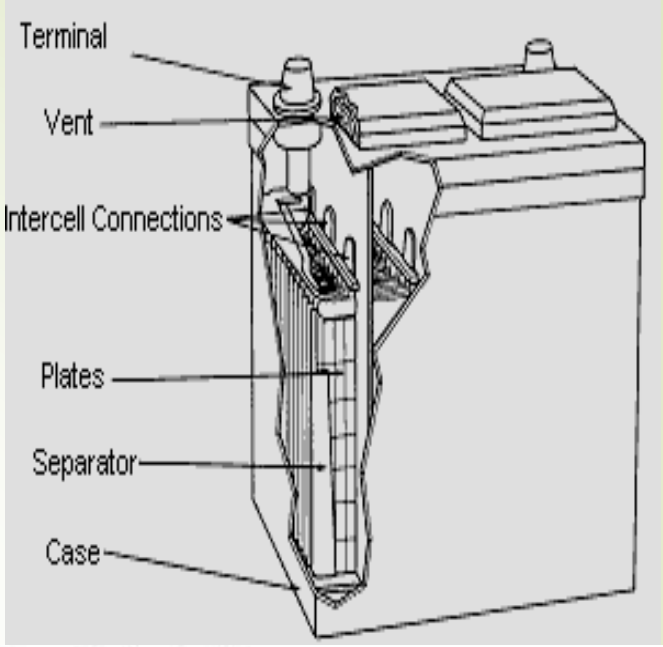

Construction:

1. **Separator:** It is most important part of lead acid battery. Which separate the positive and negative plates from each other and prevents the short circuit? The separators must be porous so that the electrolyte may circulate between the plates . The separators must have higher insulating resistance and mechanical strength. The material used for separators are wood, rubber, glass wood mate, pvc.

2. Electrolyte:in lead acid battery dilute sulphuric acid (H_2SO_4)is used as an electrolyte. For this purpose one part concentrated sulphuric acid is mixed with three parts of distilled water.

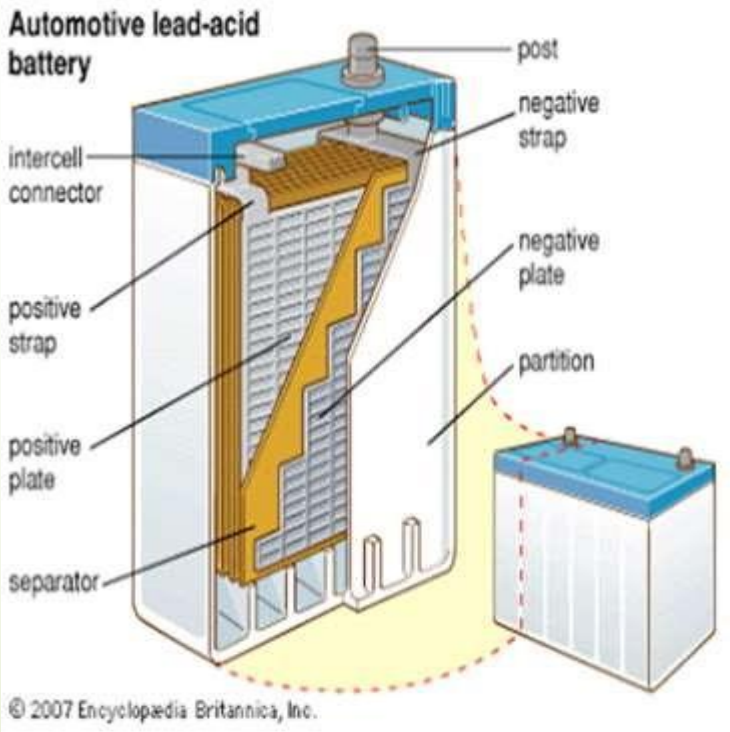

3. Container: Container is a box of vulcanized rubber, molded rubber, molded plastic, glass or ceramic , on the base of this box there are supports block on which the positive and negative plates are established. Thus between this supports there are grooves which works like a mud box. The active material separated from the plates get collected in this mud box and it cannot make the contact with the plates thus the internal faults due to the mud are avoided.

4. Cover of cell: In lead acid battery it is also made of the same material which is used is used for making container. It is used to cover the complete cell after the installation of the plates in it . it protects the cell from the dust as well as other external impurities.

5. Vent plug: The vent plug are provide in the cover plate of the cell which are used to fill up the electrolyte in the cell or the inspection of internal condition of the cell the vent plugs are aslo use for to exhaust the gases generated in the cell to the atmosphere.

6. Connecting bar: It works like a link and used to connect the two cells in series. Terminal of one cell and negative terminal of another cell.

7 terminal posts: There are the terminals of the battery which are connected to charging circuit as well as the load. For identification the diameter of the positive terminal is design more as compared to the negative terminal.

working of lead acid battery:

•Dilute sulfuric acid used for lead acid battery has ration of acid: water = 1:3. This lead acid storage battery is formed by dipping lead peroxide plate and sponge lead plate in dilute sulfuric acid. A load is connected externally between these plates.

•**During Discharging:** In diluted sulfuric acid the molecules of the acid split into positive hydrogen ions and negative sulfate ions . The hydrogen ions when reach at PbO_2 plate, they receive electrons from it and become hydrogen atom which again attack PbO_2 and form

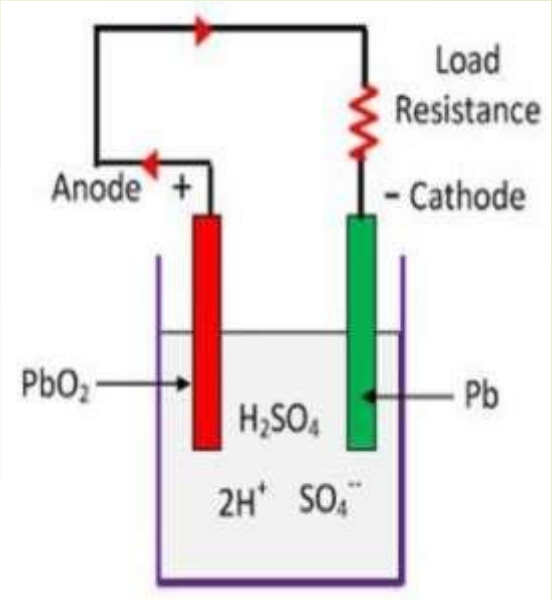

<u>Positive plate reaction</u>

$PbO_2(s) + 2H^+ \rightarrow PbO + H_2O$

$PbO + H_2SO_4 \rightarrow PbSo4 + H_20$

The total reaction can be written as

$Pbo2 + H_2SO_4 + 2H^+ \longrightarrow PbSo4 + 2H_20$

<u>Negative plate reaction</u>

<u>Pb+So4</u> $\rightarrow PbSO_4$

As H+ ions take electron from PbO_2 plate and SO_4 ions give electrons to Pb plate, there would be an inequality of electrons between these two plate. Hence there would be flow of current through the external load between these plates for balancing this inequality of electron. This process is called discharging of lead acid battery.

During Charging: During discharging , the density of sulfuric acid falls but there still sulfuric acid exist in the solution. In this case Hydrogen ions being positive charged move to the cathode connected with –ve terminal of DC source. Here each hydrogen ions take one electron from that and become hydrogen atom. These hydrogen atom then attack PbSO4 and form lead and sulfuric acid.

$$PbSO_4+2H \rightarrow H_2SO_4+Pb$$

Sulfate ions moves towards the anode connected with +ve terminal of Dc source where they will give up their extra electrons and become SO4 and form lead peroxide and sulfuric acid.

$$PbSO_4+2H_2+So_4 \rightarrow PbO_2+2H_2SO_4$$

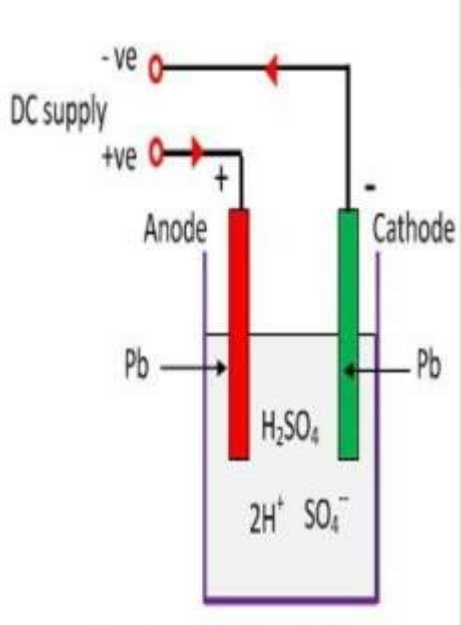

Nickle cadmium battery

Nickel-cadmium batteries, generally referred to as NiCad batteries, are in wide use in the aviation industry. With proper maintenance, they can provide years of trouble-free service.

Positive plate- Nickel hydroxide($Ni(OH)_4$)

Negative plate- Cadmium(Cd)

Electrolyte- potassium hydroxide(KOH) with a small addition of lithium hydrate.

Discharging :

At cathode: $Cd+2OH \rightarrow Cd(OH)_2$

At anode: $Ni(OH)_4 +2K \rightarrow 2KOH+Ni(OH)_2$

Charging:

At anode: $Ni(OH)_2 +2OH \rightarrow Ni(OH)_4$

At cathode: $Cd(OH)_2+2K \rightarrow Cd+2KOH$

Silver oxide cell:

A silver-oxide battery is a primary cell with a very high energy-to-weight ratio. Available either in small sizes as button cells, where the amount of silver used is minimal and not a significant contributor to the product cost, or in large custom-designed batteries, where the superior performance of the silver-oxide chemistry outweighs cost considerations. These larger cells are mostly found in applications for the military In recent years they have become important as reserve batteries for manned and unmanned spacecraft. Spent batteries can be processed to recover their silver content.

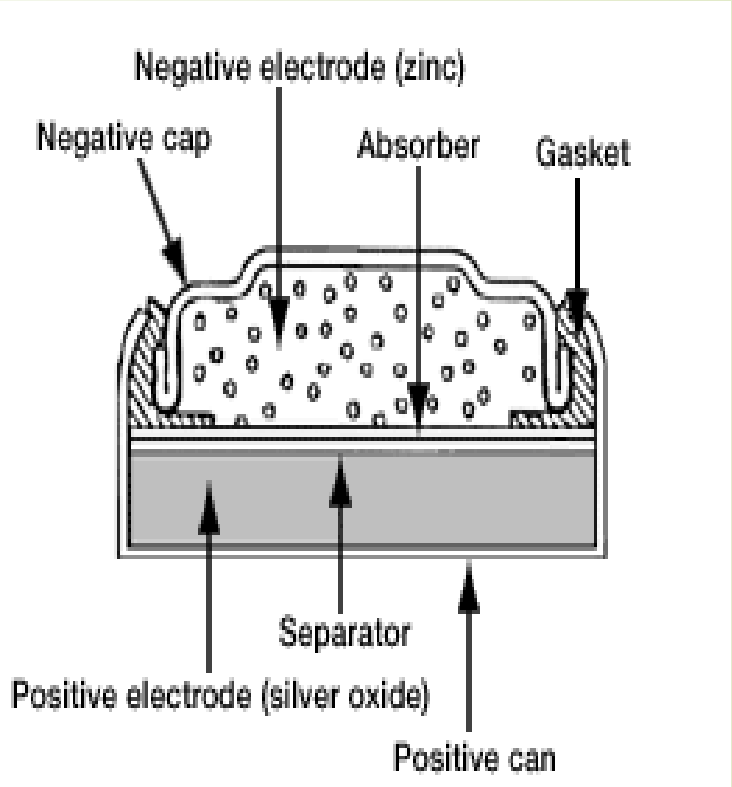

Principle and reaction

The button-type silver oxide battery uses silver oxide (Ag2O) as its positive active material and zinc (Zn) as its negative active material. Potassium hydroxide (KOH) (W-type) or sodium hydroxide (NaOH) (SW-type) is used as an electrolyte

Battery Reactions	
Positive reaction :	$Ag_2O+H_2O+2e^- \rightarrow 2Ag+2OH^-$
Negative reaction :	$Zn+2OH^- \rightarrow ZnO+H_2O+2e^-$
Total reaction :	$Ag_2O+Zn \rightarrow 2Ag+ZnO$

Methods of charging :

1. constant-current method,
2. constant-voltage method,
3. modified constant-voltage method,
4. float charging method, and trickle charging method.

1. Constant-current charging method :

In the constant-current method, a fixed current is applied for a certain time to the battery to recharge it. The charging current is set to a low value to avoid the voltage across the battery from exceeding the gassing voltage as the battery charge approaches 100%. Consequently, this results in long charge times (usually 12 hours or longer). Though it is used for charging some small lead-acid batteries, the constant current charging method is not widely used for lead-acid batteries, because of the gassing which is likely to occur when charging a battery too long. The risk of gassing is more important when charging a battery which is only partially discharged.

2. Constant-voltage charging method:

In the constant-voltage charging method, a fixed-voltage is applied to the battery to recharge it. The initial charging current (current at the beginning of the battery charge) is at its maximum and can even reach higher values (even exceeding the maximum charge current prescribed by the battery manufacturer) when the battery depth of discharge is high. For this reason, purely constant-voltage charging is seldom used to charge lead-acid batteries that are used in cyclic charge-discharge applications (e.g., battery in an electric vehicle). However, constant-voltage charging is often used to maintain the charge of lead-acid batteries used in standby applications (e.g., as in uninterruptable power supplies), in which case the charge process is referred to as float charging

3. Float charging method:

In the float charging method, a constant voltage, set to a value just sufficient to finish the battery charge or to maintain the full charge is applied to the battery. Typical float charging voltage values range from about 2.15 V to 2.3 V per battery cell. The float charging method is commonly used to maintain the charge of lead acid batteries used in stationary applications, such as in uninterruptable power supplies and SLI batteries (when the battery is charged from the motor alternator). Note that to achieve a full recharge with a low constant voltage requires the proper selection of the starting current, which is based on the manufacturer's specifications.

4. Trickle charging method:

In the trickle charging method, a low-value constant current is applied to the battery. This small current is sufficient to maintain the full charge of a battery or to restore the charge of a battery that is used intermittently for short periods of time. The trickle charging method, also called the compensating charge, is used to maintain the charge of batteries used for stationary applications and SLI batteries. During trickle charging, the battery is disconnected from the load.

Installation of Lead Acid Batteries:

1. Before removing old battery, mark the positive (+) and negative (–) cables for proper connection to the new battery.
2. Always disconnect the ground cable first [usually negative (–)] to avoid any sparking around battery. Then disconnect the positive (+) cable and carefully remove the old battery.
3. Clean and inspect. If necessary, repaint or replace the tray, hold-down and/or battery cables. Cable ends must be clean and corrosion free. Cable must not be frayed or bare.
4. Put corrosion protection washers on battery terminals. Install new battery in same position as old one and tighten hold-down. Be sure terminals will clear hood, fender, box lid, etc. to avoid vehicle damage and/or explosion.
5. Connect positive (+) cable first. Connect ground cable last. If side terminal connection, use a special side terminal torque tool to tighten side terminal cables to

Care and Maintenance of Lead Acid Batteries:

1. As soon as the voltage of the cell reaches from 1.8 volt, the specific gravity of the electrolyte goes down to discharge level
2. The discharged battery should be put on charge without delay otherwise the lead sulphate on the plates settle down which may damage the battery.
3. The battery should not be overcharged.
4. All connections should be tight.
5. The battery room should e free from dust.
6. These should be placed in a ventilated room to prevent the gases evolved from the battery.
7. Charging rate should not be high as this may cause the plates to buckle.
8. The level of the electrolyte should be proper.
9. Check the vent holes and see that these are open and blo9cked by dust and air.
10. While preparing the electrolyte for the battery, it is acid that is to be added to the water.
11. The battery terminals should never be short circuited.

APPLICATIONS OF LEAD ACID BATTERY

- These are used in automobiles for lighting and starting the vehicles. In some cases, these batteries supply current to music system etc. fitted into automobiles.
- These are used to deliver power to the lighting system in steam fed and diesel railway trains.
- These are used at generating stations and sub station to operate the controlling equipment.
- These are used in telephone exchanges.
- These are used to operate loudspeakers etc.
- These are used to provide emergency lights erc.

TESTING OF A FULLY CHARGED BATTERY:

- Voltage: The voltage of a fully charged cell is abut 2.2 volts, but quickly comes to 2.0 V when put on load
- Gassing: During discharging free gasses is an indication that battery has been charged.
- Specific gravity: During charging process, the specific gravity of the electrolyte increases and provides an important indication to the state of charge of the cell. The specific gravity of a fully charged cell is 1.28 and can be measured with hygrometer.
- Color of plate: The color of positive plate turns chocolate brown and that of negative plate is grey

GROUPING OF CELL:

- **Grouping of cell in Series**: The current capacity of a battery with cells in series is the same as that for one cell because the same current flows through all series cells. **Positive terminal of one cell is connected to the negative terminal of the next, is called a series connected battery.**

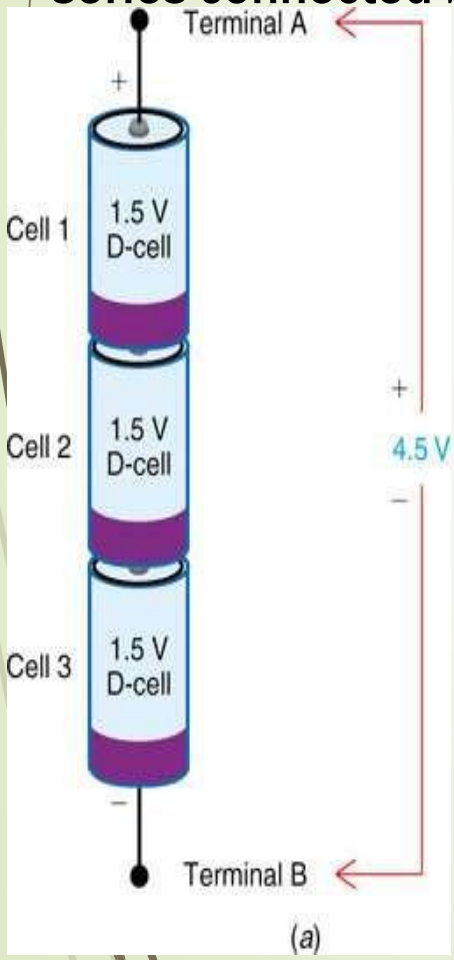

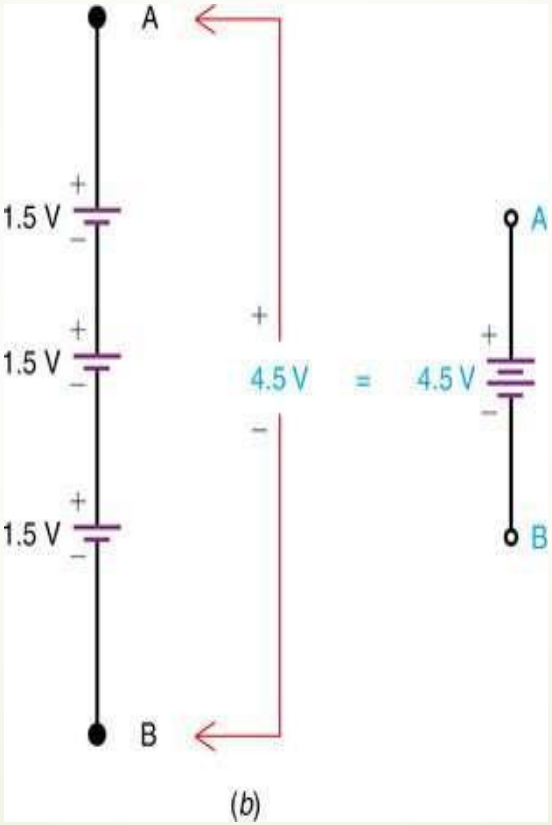

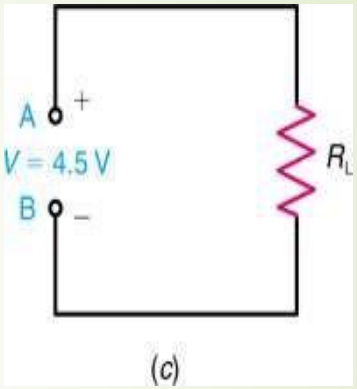

GROUPING OF CELL IN PARALLEL:

- **The <u>parallel</u> connection is equivalent to increasing the size of the electrodes and electrolyte, which increases the current capacity.**
- Connect the negative terminal from one cell to the negative of the next cell
- Connect the positive terminal to the positive terminal, is parallel connected.
- Voltage remains constant and the current is cumulative.

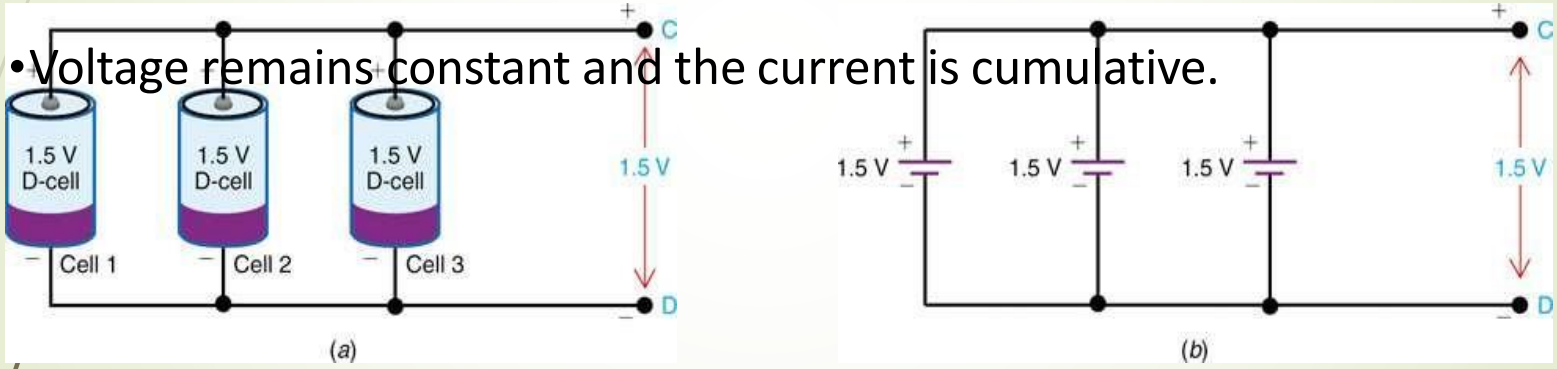

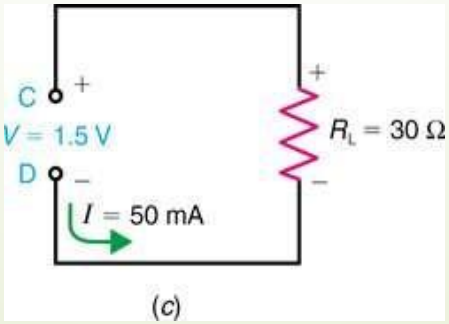

GROUPING OF CELL IN SERIES – PARALLEL COMBINATION:

To provide a higher output voltage and more current capacity, cells can be connected in <u>series-parallel</u> combination.

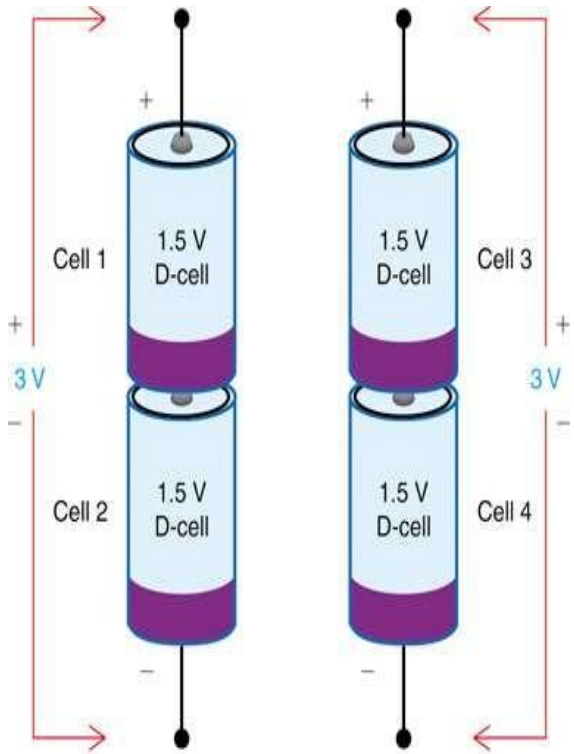

(a)

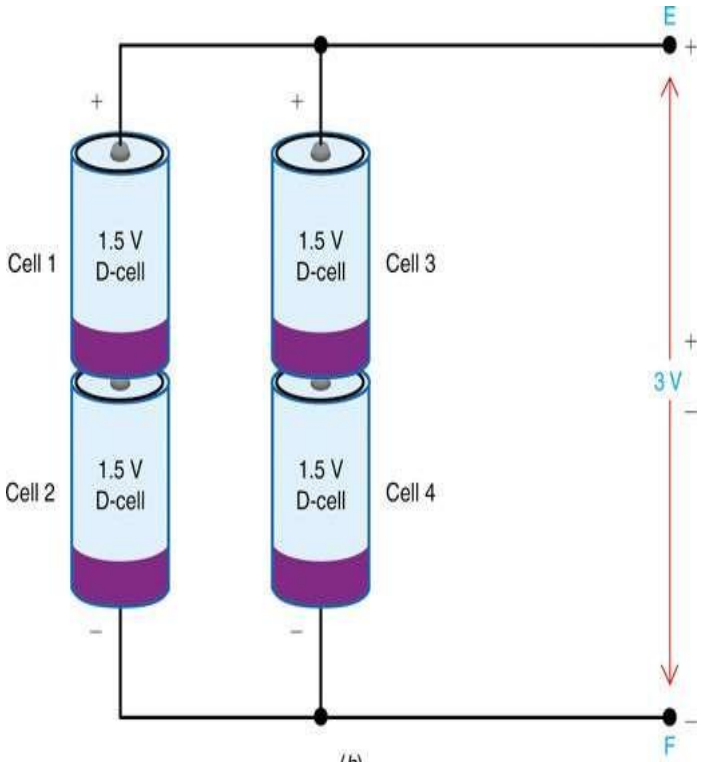

(b)

Magnetism
And
Electromagnetism

INTRODUCTION TO MAGNETS:

- It is the substance having properties of attracting iron and alloys. The phenomenon by which this attraction takes place is called magnetism.
- Not all objects are affected by the force of magnetism .example. *wood*, *glass*, *paper*, *plastic.*
- common metals affected by magnetism are *iron*, *nickel*, and *cobalt*
- Every magnet has two poles
  - north (N) pole
  - south (S) pole

  even if you break a magnet in half, each half will have a north pole and a south pole
- Properties of Magnet: like magnetic poles repel each other.unlike magnetic poles attract each other

- *Magnet are of two types*
- *Natural Magnets:*

  Artificial Magnets:

Magnetic Field –

Area around a magnet where magnetic forces can act. A magnetic field is made up of magnetic lines of force.

Magnetic Lines of Force –

Lines that show the shape of a magnetic field.

The magnetic lines of force are closest together at magnet.

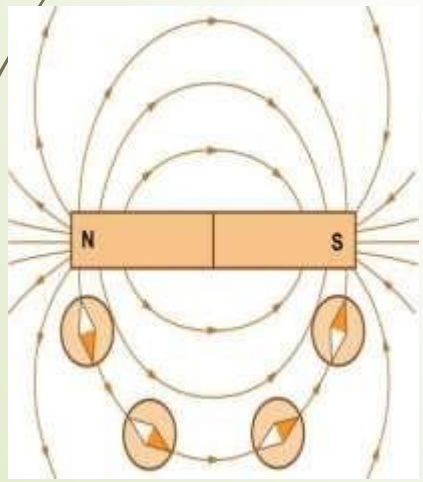

Bar magnet

MAGNETIC EFFECT OF ELECTRIC CURRENT

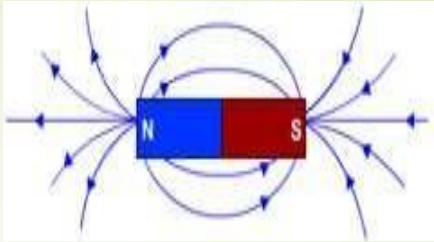

Electric Current is the flow of electric charge (a physical property of the matter that experiences a force when placed around an electromagnetic field)

•Magnetic field is the area around a magnet where the magnetic force is experienced. The imaginary lines of magnetic field around a magnet is called Magnetic Field Lines.

MAGNETIC FIELD LINES

•An Electromagnetic field (EM Field) is a combination of electric field and magnetic field. An EM field is produced when electrically charged particles, such as electrons are accelerated. Electrically charged particles are surrounded by electric fields and these charged particles when in motion generate magnetic field

•Thus, the magnetic effect of electric current is defined as

Direction of Magnetic lines of force:

RIGHT HAND THUMB RULE:

The Right Hand Thumb Rule or Maxwell's Corkscrew Rule depicts the direction of magnetic field in relation to the direction of electric current through a straight conductor.

As per this rule suppose if a current carrying conductor is held by right hand with the thumbs up straight and the electric current flowing in the direction of the thumb then the direction of the magnetic field can be depicted by the direction of wrapping of the other fingers.

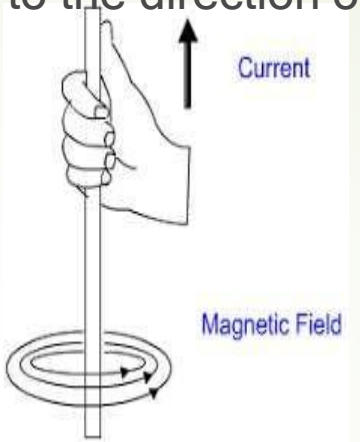

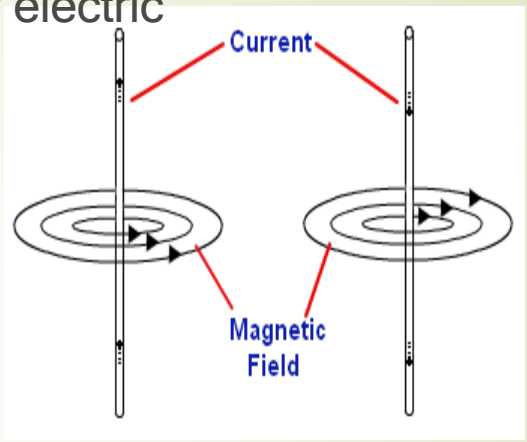

This means that if a vertically suspended current carrying conductor if the direction of the current is from south to north then the magnetic field will be in an anticlockwise direction. But if the direction of the current is flowing from north to south then the magnetic field will be in clockwise direction. In this rule, it should be noted that when current is flowing in an anticlockwise direction, then the magnetic field will be in a clockwise direction at the top of the loop and when it is vice versa then the magnetic field will be at the bottom of the loop.

Magnetic field around a straight Current Carrying conductor:

- A current carrying straight conductor has magnetic field in the form of concentric circles; around it. Magnetic field of current carrying straight conductor can be shown by magnetic field lines.
- The direction of magnetic field through a current carrying conductor depends upon the direction of flow of electric current. The direction of magnetic field gets reversed in case of a change in the direction of electric current.
- Let a current carrying conductor be suspended vertically and the electric current is flowing from south to north. In this case, the direction of magnetic field will be anticlockwise. If the current is flowing from north to south, the direction of magnetic field will be clockwise.

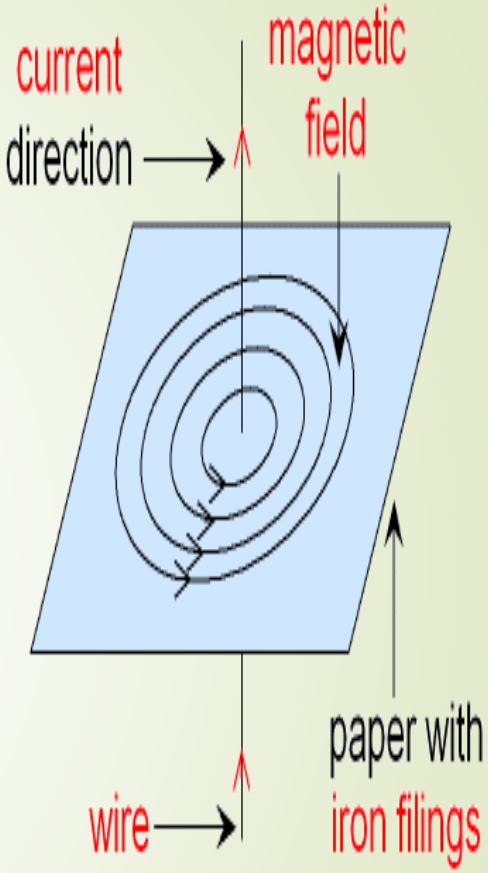

When current is flowing through a straight conductor, magnetic lines of forces are set up around the conductor in concentric circles. The red Arrow indicates the direction of current where as the black arrow indicates the magnetic field.

Magnetic Field due to a current in a Solenoid:

- Solenoid is the coil with many circular turns of insulated copper wire wrapped closely in the shape of cylinder.
- A current carrying solenoid produces similar pattern of magnetic field as a bar magnet. One end of solenoid behaves as the north pole and another end behaves as the south pole. Magnetic field lines are parallel inside the solenoid; similar to a bar magnet; which shows that magnetic field is same at all points inside the
- By producing a side the solenoid, magnetic materials can be n by producing magnetic field inside a solenoid is

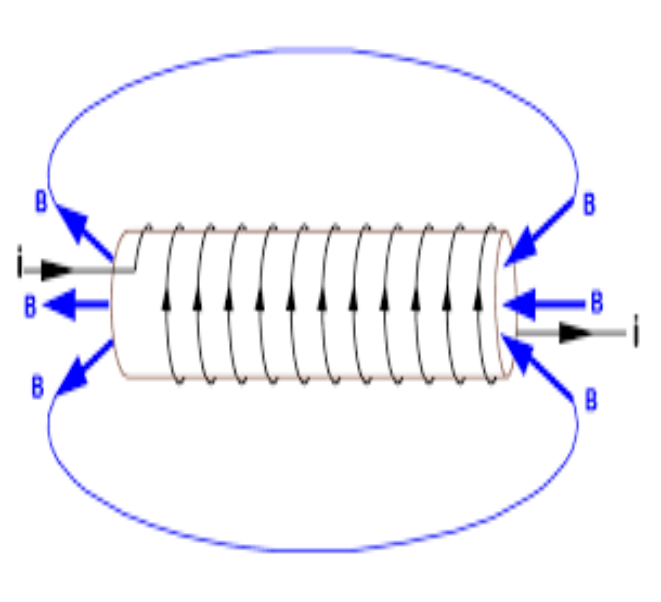

FORCE ON A CONDUCTOR PLACED IN A MAGNETIC FIELD

When a current carrying conductor is placed in a magnetic field, the conductor experiences a mechanical force which acts in a direction perpendicular to both the direction of current and the field.

Let us consider a current carrying conductor is placed in a uniform magnetic field as shown in figure By applying Right Hand Thumb Rule, It is seen that the direction of field around the conductor is found to be clockwise.

The magnetic field due to N and S pole and conductor are shown. The line of forces due to current carrying conductor and you two poles are in same direction at top. As shown to field at the top of conductor are helping each other (means magnetic lines due to pole and conductor are in same direction) whereas, at the bottom of the conductor, field due to poles is in opposite direction to the field due to current (means to field are in opposite direction). The result is that the lines of forces are crowded at the top of conductor and thinned at the bottom as shown.

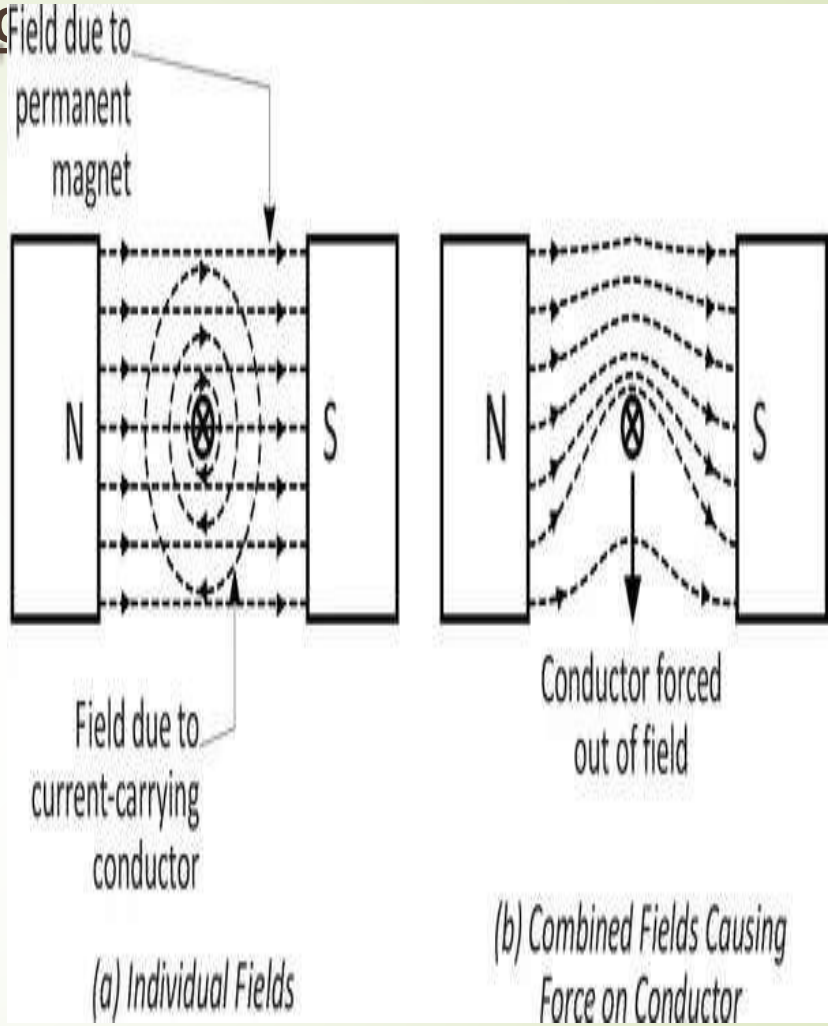

FIELD INTENSITY (*H*) OR MAGNETIZING FORCE :

- The magneto motive force per unit length is called the **magnetizing force** (*H*)..
- Equation: H = mmf/length
- Units: AT/m
  ampere-turns per meter
- Shorter magnetic circuits produce a greater field intensity

Permeability (μ) :

- **Permeability** is a measure of the ability to concentrate magnetic fields. Materials with high permeability can concentrate flux, and produce large values of flux density *B* for a specified *H*.

The amount of flux produced by *H* depends on the material in the field. These factors are reflected in the formulas:

$$B = \mu \times H$$

$$\mu = B / H$$

The ratio of the permeability of the material to that of air is called the **relative permeability.**

AMPERE-TURNS OF MAGNETO MOTIVE FORCE (MMF):

- The strength of a coil's magnetic field is proportional to the amount of current flowing through the coil and the number of turns per given length of coil.
- Ampere-turns = $I \times N$ = mmf
- I is the amount of current flowing through N turns of wire.
- This formula specifies the amount of magnetizing force or magnetic potential (mmf).

flux density :

$$B = \frac{\Phi}{A}$$

$B = \text{Wb/m}^2 = \text{teslas (T)}$

$\Phi = \text{webers (Wb)}$

$A = \text{m}^2$

SERIES MAGNETIC CIRCUITS: DETERMINING NI

- We are now in a position to solve a few magnetic circuit problems, which are basically of two types.
- *In one type, Φ is given, and the impressed mmf NI must be computed.*
- This is the type of problem encountered in the design of motors, generators, and transformers.
- *In the other type, NI is given, and the flux Φ of the magnetic circuit must be found.*
- This type of problem is encountered primarily in the design of magnetic amplifiers and is more difficult since the approach is "hit or miss."

Series Magnetic Circuit

Definition: The **Series Magnetic Circuit** is defined as the magnetic circuit having a number of parts of different dimensions and materials carrying the same magnetic field. Consider a circular coil or solenoid having differen

the figure below

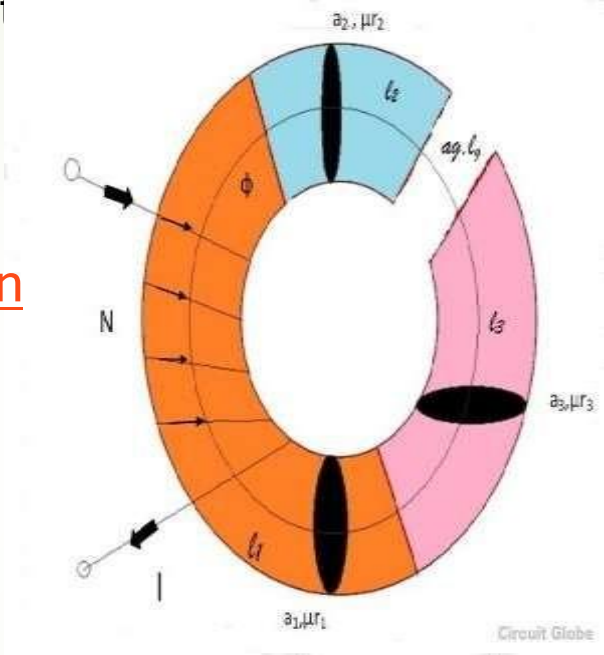

Current I is passed through the solenoid having N number of turns wound on the one section of the circular coil. Φ is the flux, sets up in the core of the coil.

a_1, a_2, a_3 are the cross-sectional area of the solenoid.

l_1, l_2, l_3 *are* the length of the three different coils having different dimension joined together in series.

μr_1, μr_2, μr_3 are the relative permeability of the material of the circular coil.

a_g and are the area and the length of the air gap.

The total reluctance (S) of the magnetic circuit is

$$S = S_1 + S_2 + S_3 + S_g$$

$$S = \frac{l_1}{a_1 \mu_0 \mu_{r1}} + \frac{l_2}{a_2 \mu_0 \mu_{r2}} + \frac{l_3}{a_3 \mu_0 \mu_{r3}} + \frac{l_g}{a_g \mu_0}$$

Total MMF = φ x S … … . . … . (1)

Putting the value of S in equation (1) we get

$$\text{Total mmf} = \varphi \; x \; \frac{l_1}{a_1 \mu_0 \mu_{r1}} + \frac{l_2}{a_2 \mu_0 \mu_{r2}} + \frac{l_3}{a_3 \mu_0 \mu_{r3}} + \frac{l_g}{a_g \mu_0} \ldots\ldots\ldots (2)$$

As B = φ/a) putting the valve of B in the equation (2) we obtain the following equation for the total MMF

$$\text{Total mmf} = \frac{B_1 l_1}{\mu_0 \mu_{r1}} + \frac{B_2 l_2}{\mu_0 \mu_{r2}} + \frac{B_3 l_3}{\mu_0 \mu_{r3}} + \frac{B_g l_g}{\mu_0}$$

$$(\text{As } H = B/\mu_0 \mu_r)$$

$$\text{Total mmf} = H_1 l_1 + H_2 l_2 + H_3 l_3 + H_g l_g$$

Magnetic Circuit

The closed path followed by magnetic lines of forces or we can say magnetic flux is called magnetic circuit. A magnetic circuit is made up of magnetic materials having high permeability such as iron, soft steel, etc. Magnetic circuits are used in various devices like electric motor, transformers, relays, generators galvanometer, etc.

Electric Circuit

The rearrangement by which various electrical sources like AC source or DC source, resistances, capacitance and another electrical parameter are connected is called electric circuit or electrical network.

DIFFERENCE BETWEEN ELECTRIC CIRCUIT AND MAGNETIC CIRCUIT :

BASIS	MAGNETIC CIRCUIT	ELECTRIC CIRCUIT
Definition	The closed path for magnetic flux is called magnetic circuit.	The closed path for electric current is called electric circuit.
Relation Between Flux and Current	Flux = mmf/reluctance	Current = emf/ resistance
Units	Flux φ is measured in weber (wb)	Current I is measured in amperes
MMF and EMF	Magnetomotive force is the driving force and is measured in Ampere turns (AT) Mmf =∫ H.dl	Electromotive force is the driving force and measured in volts (V) Emf = ∫ E.dl
Reluctance and Resistance	Reluctance opposes the flow of magnetic flux S = l/aμ and measured in	Resistance opposes the flow of current R = ρ. l/a and measured in

Relation between Permeance and Conduction	Permeance = 1/reluctance	Conduction = 1/ resistance
Analogy	Permeability	Conductivity
Analogy	Reluctivity	Resistivity
Density	Flux density B = φ/a (wb/m2)	Current density J = I/a (A/m2)
Intensity	Magnetic intensity H = NI/l	Electric density E = V/d
Drops	Mmf drop = φS	Voltage drop = IR
Flux and Electrons	In magnetic circuit molecular poles are aligned. The flux does not flow, but sets up in the magnetic circuit.	In electric circuit electric current flows in the form of electrons.
Examples	For magnetic flux, there is no perfect insulator. It can set up even in the non magnetic materials like air, rubber, glass etc.	For electric circuit there are a large number of perfect insulators like glass, air, rubber, PVC and synthetic resin which do not allow it to flow through them.
Applicable Laws	Khirchhoff flux and mmf law is followed	Khirchhoff voltage and current law is followed.

Variation of Reluctance and Resistance	The reluctance (S) of a magnetic circuit is not constant rather it varies with the value of B.	The resistance (R) of an electric circuit is almost constant as its value depends upon the value of ρ. The value of ρ and R can change slightly if the change in temperature takes place
Energy in the circuit	Once the magnetic flux sets up in a magnetic circuit, no energy is expanded. Only a small amount of energy is required at the initial stage to create flux in the circuit.	Energy is expanding continuously, as long as the current flows through the electrical circuit. This energy is dissipated in the form of heat.

MAGNETIC HYSTERESIS: HYSTERESIS REFERS TO A SITUATION WHERE THE MAGNETIC FLUX LAGS THE INCREASES OR DECREASES IN MAGNETIZING FORCE.

- **Hysteresis Loop**
  - B_R is due to **retentivity,** which is the flux density remaining after the magnetizing force is reduced to zero.
  - Note that $H = 0$ but $B > 0$.
  - H_C is the coercive force (needed to make $B = 0$)

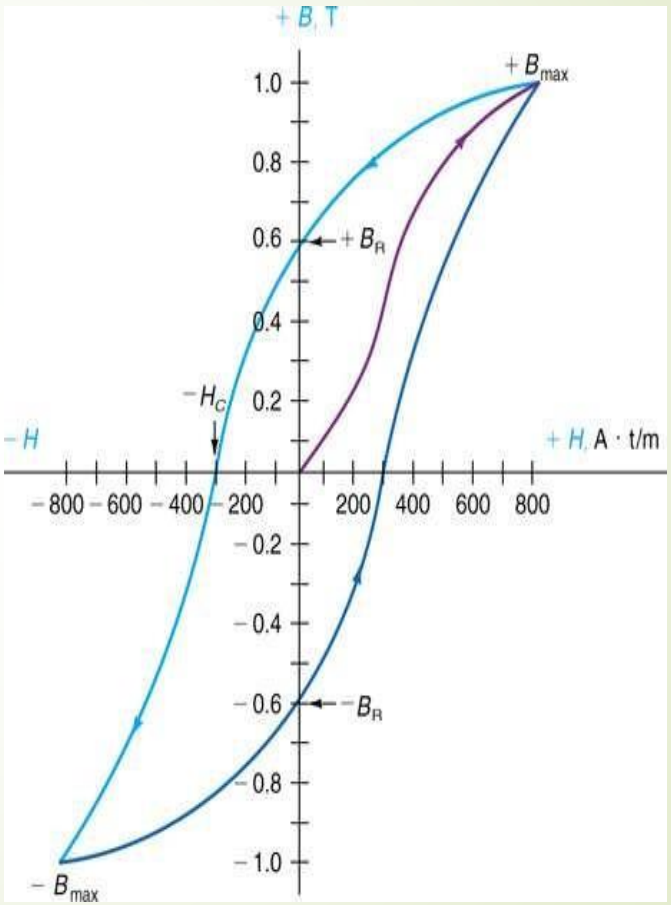

Demagnetization :

To demagnetize a magnetic material completely, the retentivity B_R must be reduced to zero.

The practical way to do so is to magnetize and demagnetize the material with a decreasing hysteresis loop:

MAGNETIC HYSTERESIS LOSS

Hysteresis loss is energy wasted in the form of heat when alternating current reverses rapidly and molecular dipoles lag the magnetizing force.
For steel and other hard magnetic materials, **hysteresis losses** are much higher than in soft magnetic materials like iron.

- $P_h = (k_h)(f)(B_{max})^n$ where
  - P_h = hysteresis loss (W/unit mass)
  - f = frequency of the flux (Hz)
  - B_{max} = maximum value of the flux
  - k_h = constant
  - n = Steinmetz exponent
    - Value of 1.6 for silicon steel sheets

B-H MAGNETIZATION CURVE

- The *B-H* magnetization curve shows how much flux density *B* results from increasing field intensity *H*.
- **Saturation** is the effect of little change in flux density when the field intensity increases.

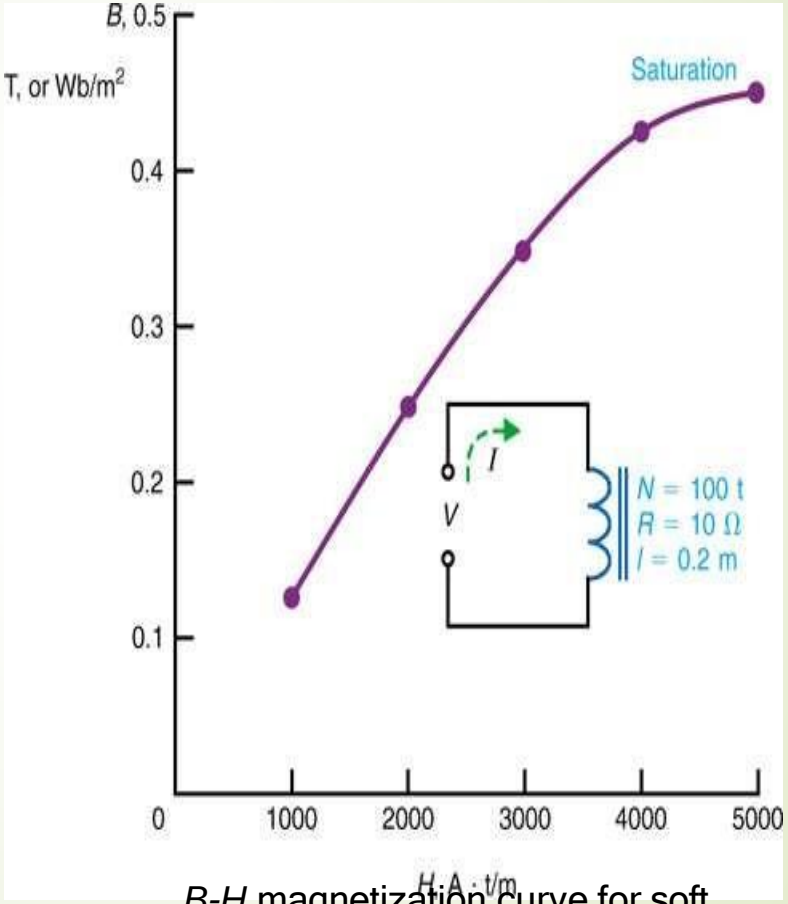

B-H magnetization curve for soft iron. No values are shown near zero, where μ may vary with previous magnetization.

Electromagnetic Induction

ELECTROMAGNETIC INDUCTION

Electromagnetic or **magnetic induction** is the production of an electromotive force (i.e., voltage) across an electrical conductor in a changing magnetic field

- Electromagnetic induction can be generated in two ways, namely when the electric conductor is kept in a moving magnetic field and when the electric conductor is constantly moving within a static magnetic field. The phenomenon of electromagnetic induction was first discovered by Michael Faraday when he moved a bar magnet through an electric coil. He noticed a change in voltage of the circuit. He later deduced the factors that could influence the electromagnetic induction as the number of coils, the strength of the magnet, the changing magnetic fields and the speed of relative motion between coil & magnet.
- The number of turns in the coils/wire is directly proportional to induced voltage. In other words, greater voltage is generated when the number of turns is higher. The changing magnetic field also influences the voltage which is induced. The speed of the relative motion between the coil and magnet was also found to affect the induced voltage or electromagnetic induction as rise in velocity cuts the lines of flux at a faster rate. This results in more induced electromagnetic force or voltage.
- The induced voltage in an electromagnetic induction is described by the following equation as:
- $e = N \times d\Phi dt$
- Where
- e = voltage induced (measured in volts)
- t = time (measured in seconds)
- N = number of turns found in the coil
- Φ = magnetic flux (measured in Webers)
- Many types of electrical equipment such as motors, generators and transformers function based on the principle of the electromagnetic induction.

FARADY'S FIRST LAW

: When a conductor cuts across the magnetic field, an e.m.f is induced in the conductor.

Or

When the magnetic flux linking with any circuit or coil changes , an e.m.f is induced in the circuit.

Faraday's second law:

It states that the magnitude of emf induced in the coil is equal to the rate of change of flux that linkages with the coil.

$$E = -N\frac{d\phi}{dt}$$

Lenz's law

Lenz's law states that when an emf is generated by a change in magnetic flux according to Faraday's Law, the polarity of the induced emf is such, that it produces an current that's magnetic field opposes the change which produces it. The negative sign used in Faraday's law of electromagnetic induction, indicates that the induced emf (ε) and the change in magnetic flux ($\delta\Phi_B$) have opposite signs.

$$\epsilon = -N\frac{\partial\Phi_B}{\partial t}$$

Where, ε = Induced emf

$\delta\Phi_B$ = change in magnetic flux

N = No of turns in coil

FLEMING'S LEFT HAND RULE

To find the direction of the force on a current carrying conductor, Fleming's left hand rule can be used

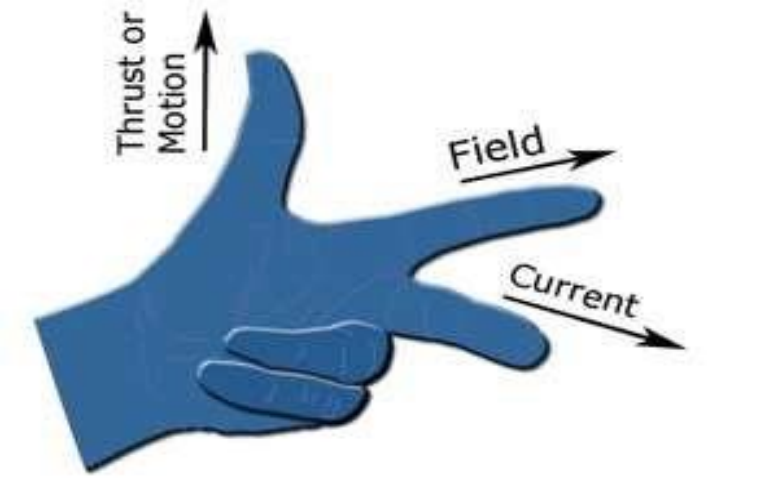

When current flows through a conducting wire, and an external magnetic field is applied across that flow, the conducting wire experiences a force perpendicular both to that field and to the direction of the current flow (i.e they are mutually perpendicular) .
A left hand can be held, as shown in the illustration, so as to represent three mutually orthogonal axes on the thumb, fore finger and middle finger. Each finger is then assigned to a quantity (mechanical force, magnetic field and electric current). The right and left hand are used for generators and motors respectively.

FLEMING'S RIGHT-HAND RULE

Fleming's Right-hand Rule shows the direction of induced current when a conductor attached to a circuit moves in a magnetic field. It can be used to determine the direction of current in a generator's windings.

When a conductor such as a wire attached to a circuit moves through a magnetic field, an electric current is induced in the wire due to Faraday's law of induction. The current in the wire can have two possible directions. Fleming's right-hand rule gives which direction the current flows.

The right hand is held with the thumb, index finger and middle finger mutually perpendicular to each other (at right angles), as shown in the diagram.

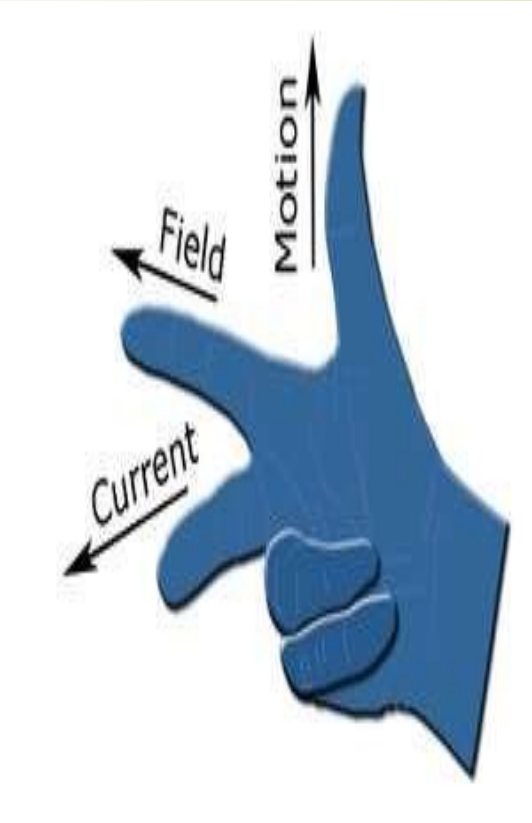

- **The thumb is pointed in the direction of the motion of the conductor relative to the magnetic field.**
- **The first finger is pointed in the direction of the magnetic field. (north to south)**
- **Then the second finger represents the direction of the induced or generated current within the conductor (from the terminal with lower electric potential to the terminal with higher electric potential, as in a voltage**

TYPES OF INDUCED EMF

- Whenever a conductor is placed in a varying magnetic field, EMF is induced in the conductor and this EMF is called induced EMF.

Induced EMF is of two types

I. Dynamically induced EMF

When the conductor is in motion and the field is in stationary so the EMF is induced in the conductor, this type of EMF is called dynamically induced EMF.

II. Statically induced EMF

When the conductor is in stationary and the field is changing (varying) then in this case EMF is also induced in the conductor, which is called statically induced EMF.

Statically induced EMF is of two types-

Self induced EMF

Self-induced EMF is that EMF which is induced in the conductor by changing in its own. When current is changing the magnetic field is also changing around the coil and hence Faraday law is applied here and EMF are induced in the coil to it self which called self induced EMF.

Mutually induced EMF-When an alternating voltage or current is applied to the coil 'a' alternating current will flow in the coil' a' and is a result of which a

PRINCIPLE OF SELF INDUCTION

The property of a circuit by which an EMF is induced in the circuit whenever the current is flowing through it changes, is termed as self inductance.

Consider of coil of N turns (Air core) carrying a current of I amps. Let The Flux linking with the coil be Φ webers. then flux linkages = N I.

The lines of flux linking the coil will change with the change in current. This will induce an EMF according to Faraday's law. The EMF to induce is called self induced EMF.

Φ

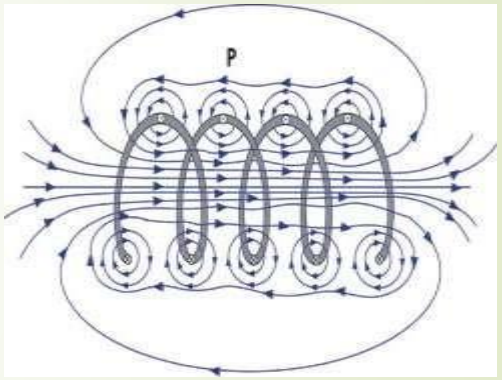

COEFFICIENT OF SELF INDUCTANCE

NΦ /I i.e, flux linking for ampere is called the coefficient of self induction or inductance denoted by L.

If the current through the coil changes at the rate of one amp/second and the EMF induced and it is one volt, then self inductance is 1 Henry.

Mathematically

EMF of self inductance e_L =-L x rate of change of current in ampere/Second.

FACTORS ON WHICH INDUCTANCE DEPENDS

The factor on which inductance depends are:

1. Number of turns in the coil.
2. Length of the coil.
3. Area of cross section of the coil.
4. Permeability of Core.

Self-inductance or in other words inductance of the coil is defined as the property of the coil due to which it opposes the change of current flowing through it. Inductance is attained by a coil due to the self-induced emf produced in the coil itself by changing the current flowing through it.

If the current in the coil is increasing, the self-induced emf produced in the coil will oppose the rise of current, that means the direction of the induced emf is opposite to the applied voltage.

Self-inductance does not prevent the change of current, but it delays the change of current flowing through it.

This property of the coil only opposes the changing current (alternating current) and does not affect the steady current that is (direct current) when flows through it. The unit of inductance is Henry (H).

Expression For Self Inductance

$$e = L\frac{dI}{dt}$$

Or

$$L = \frac{e}{dI/dt}$$

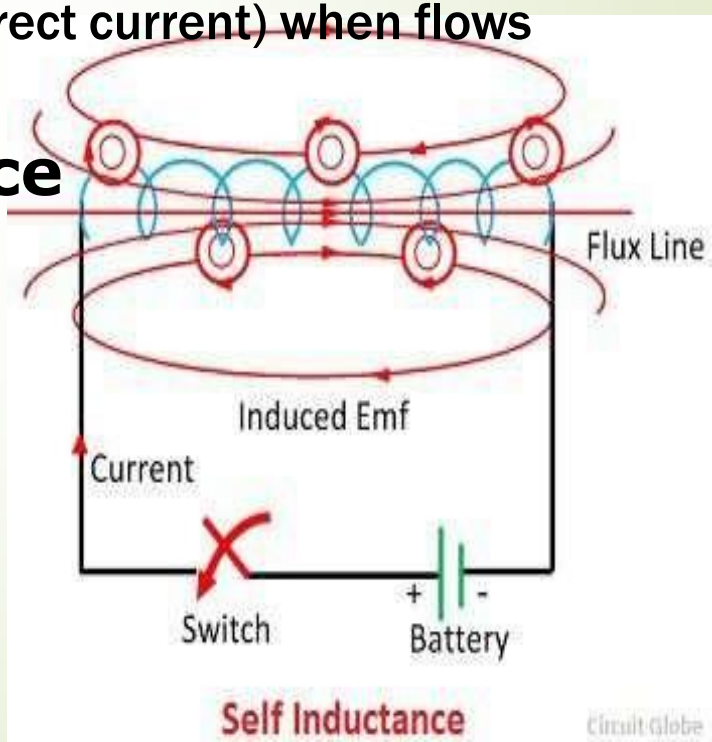

- The above expression is used when the magnitude of self-induced emf (e) in the coil and the rate of change of current (dI/dt) is known.
- **Putting the following values in the above equations as e = 1 V, and dI/dt = 1 A/s then the value of Inductance will be L = 1 H.**
- **Hence, from the above derivation, a statement can be given that a coil is said to have an inductance of 1 Henry if an emf of 1 volts is induced in it when the current flowing through it changes at the rate of 1 Ampere/second.**

The expression for Self Inductance can also be given as

$$e = L\frac{dI}{dt} = \frac{d}{dt}(LI) \text{ also } e = N\frac{d\varphi}{dt} = \frac{d}{dt}(N\varphi)$$

$$LI = N\varphi \text{ or } L = \frac{N\varphi}{I} \text{ Henry}$$

where,
N – number of turns in the coil
Φ – magnetic flux
I – current flowing through the coil

From the above discussion, the following points can be drawn about Self Inductance

- The value of the inductance will be high if the magnetic flux is stronger for the given value of current.
- The value of the Inductance also depends upon the material of the core and the number of turns in the coil or solenoid.
- The higher will be the value of the inductance in Henry, the rate of change of current will be lower.
- 1 Henry is also equal to 1 Weber/ampere

The solenoid has large self-inductance.

Principle of Mutual Induction

The property of one coil due to which it opposes the change of current in the other coil is called mutual induction between two coils.

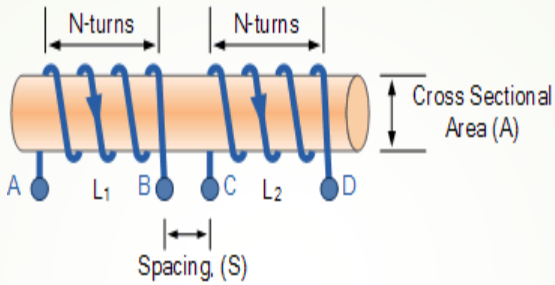

Here the current flowing in coil one, L_1 sets up a magnetic field around itself with some of these magnetic field lines passing through coil two, L_2 giving us mutual inductance.

Coil one has a current of I_1 and N_1 turns while, coil two has N_2 turns. Therefore, the mutual inductance, M_{12} of coil two that exists with respect to coil one depends on their position with respect to each other and is given as:

$$M_{12} = \frac{N_2 \Phi_{12}}{I_1}$$

MUTUAL INDUCED EMF

- **Definition: Mutual Inductance** between the two coils is defined as the property of the coil due to which it opposes the change of current in the other coil, or you can say in the neighboring coil. When the current in the neighboring coil is changing, the flux sets up in the coil and because of this changing flux emf is induced in the coil called Mutually Induced emf and the phenomenon is known as Mutual Inductance.

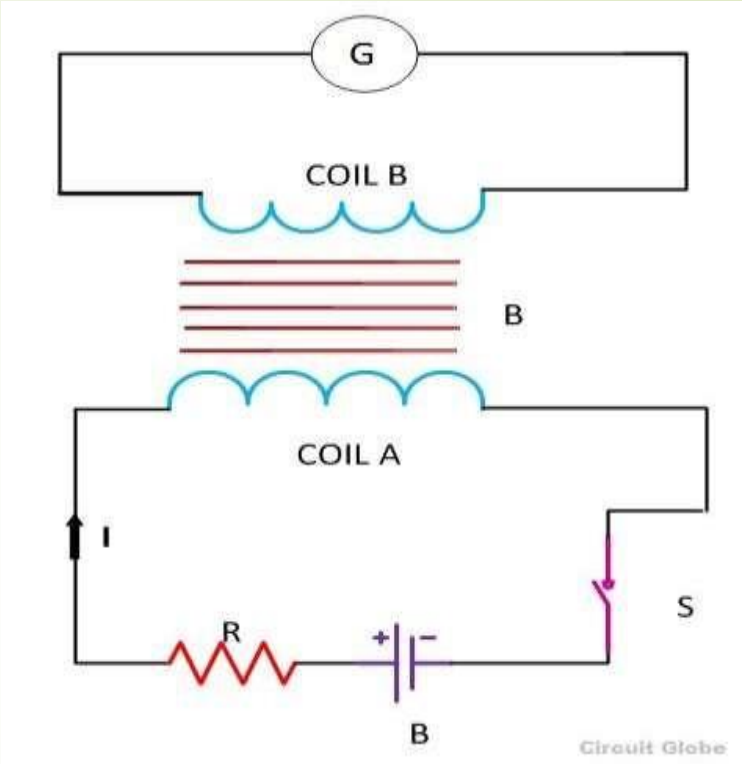

Let us understand the phenomenon of Mutual Inductance by considering an example as shown in the above figure.

Two coils namely coil A and coil B is placed nearer to each other. When the switch S is closed, and the current flows in the coil it sets up the flux φ in the coil A and emf is induced in the coil and if the value of the current is changed by varying the value of the resistance (R), the flux linking with the coil B also changes because of this changing current. Thus this phenomenon of the linking flux of the coil A with the other coil, B is called Mutual Inductance.

- For de ... uctance between the two coils, the follow

$$e_m = M\frac{dI_1}{dt}$$

or

$$M = \frac{e_m}{dI_1/dt} \text{ .....(1)}$$

This expression is used when the magnitude of mutually induced emf in the coil and the rate of change of current in the neighboring coil is known.

Hence, from the above statement, you can define Mutual Inductance as "the two coils are said to have a mutual inductance of one Henry if an emf of 1 volt is induced in one coil or say primary coil when the current f ... neighboring coil or secondary coil is changing at the rate

$$e_m = M\frac{dI_1}{dt} = \frac{d}{dt}(MI_1) \text{ ..... (2) also}$$

$$e_m = N_2\frac{d\varphi_{12}}{dt} = \frac{d}{dt}(N_2\varphi_{12}) \text{ .....(3)}$$

Mutual inductance can also be expressed in another way as shown below

equating equation (2) and (3) you will get

$$MI_1 = N_2\varphi_{12} \text{ Or } M = \frac{N_2\varphi_{12}}{I_1} \text{ Henry}$$

The above expression is used when the flux linkage ($N_2\varphi_{12}$) of one coil due to the current (I_1) flowing through the other coil are known.

The value of Mutual Inductance (M) depends upon the following factors

- Number of turns in the secondary or neighboring coil
- Cross-sectional area
- Closeness of the two coils

Mutual Coupling In the Magnetic Circuit

When on a magnetic core, two or more than two coils are wound the coils are said to be mutually coupled. The current, when passed in any of the coils wound around the magnetic core, produces flux which links all the coils together and also the one in which current is passed. Hence, there will be both self-induced emf and mutual induced emf in each of the coils.

The best example of the mutual inductance is transformer, which works on the principle of Faraday's Law of Electromagnetic Induction.

Faraday's law of electromagnetic induction states that " the magnitude of voltage is directly proportional to the rate of change of flux." which is explained in the topic Faraday's Law of Electromagnetic Induction.

INDUCTANCE IN SERIES

The two coils may be connected in series in the following ways or methods:

1. When their fluxes are additive (i.e. their fluxes are in the same direction as shown in figure).
In this case, the inductance of a coil is increased by M.

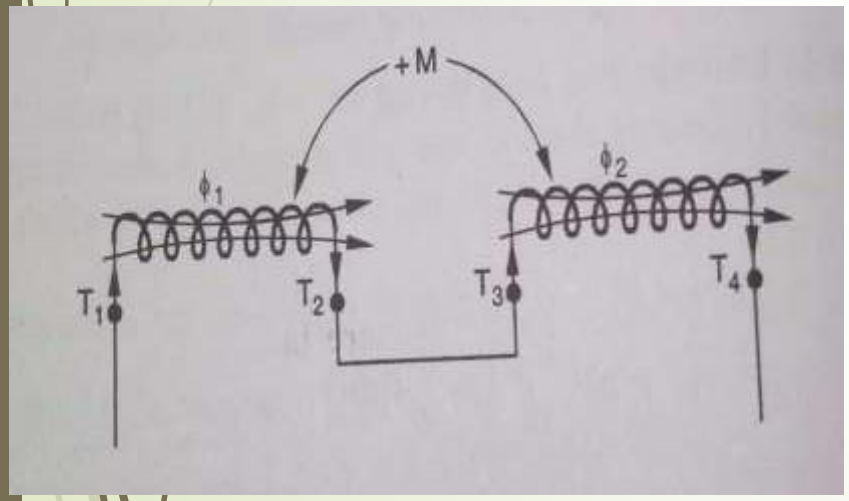

Therefore, Total Inductance,

$$LT = (L_1 + M) + (L_2 + M)$$
$$= L_1 + L_2 + 2M.$$

2. When their fluxes are subtracted (i.E. Their classes are set up in the opposite direction as shown in figure). in this case, the inductance of each coil is decreased by M.

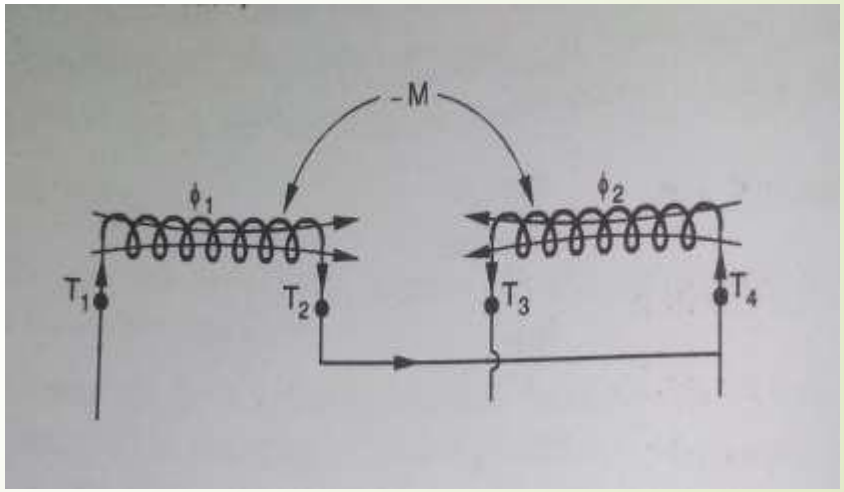

Therefore, Total Inductance,

$$LT = (L_1 - M) + (L_2 - M)$$
$$= L_1 + L_2 - 2M.$$

INDUCTANCE IN PARALLEL

The two coils may be connected in series in the following ways or methods:

1. When the two field produced by them are in the direction as shown in figure.

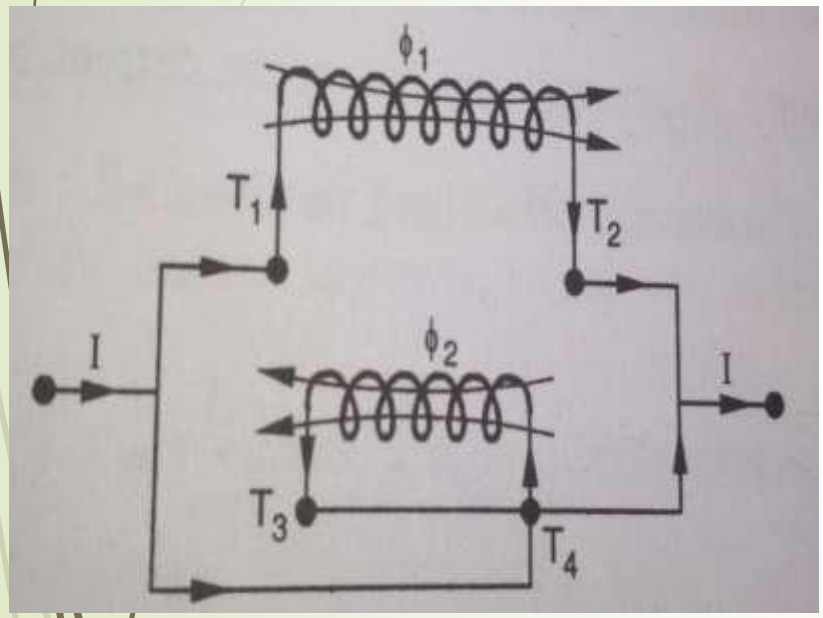

Total inductance,

$$LT = \frac{L_1 L_2 - M^2}{L_1 + L_2 - 2M}$$

2. When the two fields produced by them are in opposite direction as shown in figure

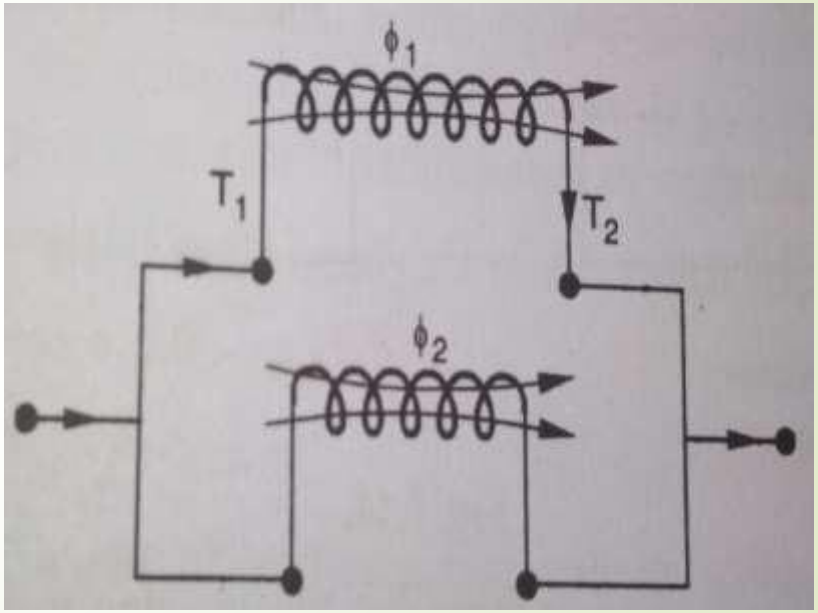

Total inductance,

$$LT = \frac{L_1 L_2}{L_1 + L_2}$$

Energy Stored in a Magnetic Field

It takes energy to establish a current in an inductor; this energy is stored in the inductor's magnetic field.

Considering the emf needed to establish a particular current, and the power involved, we find:

Energy Stored in an Inductor

$$U = \frac{1}{2}LI^2$$

SI unit: joule, J

CONCEPT OF EDDY CURRENT, EDDY CURRENT LOSS

Whenever the magnetic flux linkages within close electric circuit changes, an EMF is induced in the circuit, this induced EMF circulate current within the body of material this circulating current is known as Eddy current the current in each part is directly proportional to the induced EMF and inversely proportional to the square of current in it and owing to the heat energy developed (I2R), the material quickly become hot. This energy loss is called Eddy current loss. Due to Eddy current loss, rise in temperature of material takes place.

Eddy current loss : Power loss due to Eddy current is called Eddy current loss.

Mathematically,

$$\text{Eddy current loss} = K_e.B_m^2.t^2.f^2.v \text{ watt}$$

Where,

K_e = coefficient of Eddy current and its value depends upon the nature of magnetic material.

B_m = maximum value of flux density in Wb/m^2.

t = thickness of lamination in metre.

f = frequency of reversal of magnetic field in Hz.

v = volume of magnetic materials in m^3.

FACTORS AFFECTING EDDY CURRENT LOSS

The following are the main factors responsible for Eddy current loss:

(a) **Lamination Thickness** : Eddy current loss is proportional to the square of thickness of lamination. Therefore, the Eddy current losses will keep on increasing with the thickness of lamination.

(b) **Volume of Material** : Eddy current loss is directly proportional to the volume of magnetic material.

(c) **Frequency**: Eddy current loss is directly proportional to the square of frequency. Therefore, Eddy current loss increases with the increase in frequency.

(d) **Maximum Flux Density** : Eddy current loss is directly proportional to the square of maximum value of flux density.

METHODS OF REDUCING EDDY CURRENT LOSS

Eddy current losses can be reduced by taking following steps:

1. Eddy current is reduced by using very thin laminations of the core. Usual thickness of lamination is about 0.5 mm.
2. Each lamination is insulated from each other by thin layer of varnish or oxide film.
3. Eddy current losses are reduced by using high specific resistance materials like Silicon, Steel etc.

Magnetic field	A force field radiating from the north pole to the south pole of a magnet.
Magnetic flux	The lines of force between the north pole and south pole of a permanent magnet or an electromagnet.
Weber (Wb)	The SI unit of magnetic flux, which represents 10^8 lines.
Permeability	The measure of ease with which a magnetic field can be established in a material.
Reluctance	The opposition to the establishment of a magnetic field in a material.

Magnetomotive force (mmf)

The cause of a magnetic field, measured in ampere-turns.

Solenoid

An electromagnetically controlled device in which the mechanical movement of a shaft or plunger is activated by a magnetizing current.

Hysteresis

A characteristic of a magnetic material whereby a change in magnetism lags the application of the magnetic field intensity.

Retentivity

The ability of a material, once magnetized, to maintain a magnetized state without the presence of a magnetizing current.

Induced voltage (v_{ind})

Voltage produced as a result of a changing magnetic field.

Faraday's law

A law stating that the voltage induced across a coil of wire equals the number of turns in the coil times the rate of change of the magnetic flux.

Lenz's law

A law stating that when the current through a coil changes, the polarity of the induced voltage created by the changing magnetic field is such that it always opposes the change in the current that caused it. The current cannot change instantaneously.